SM - A605FN

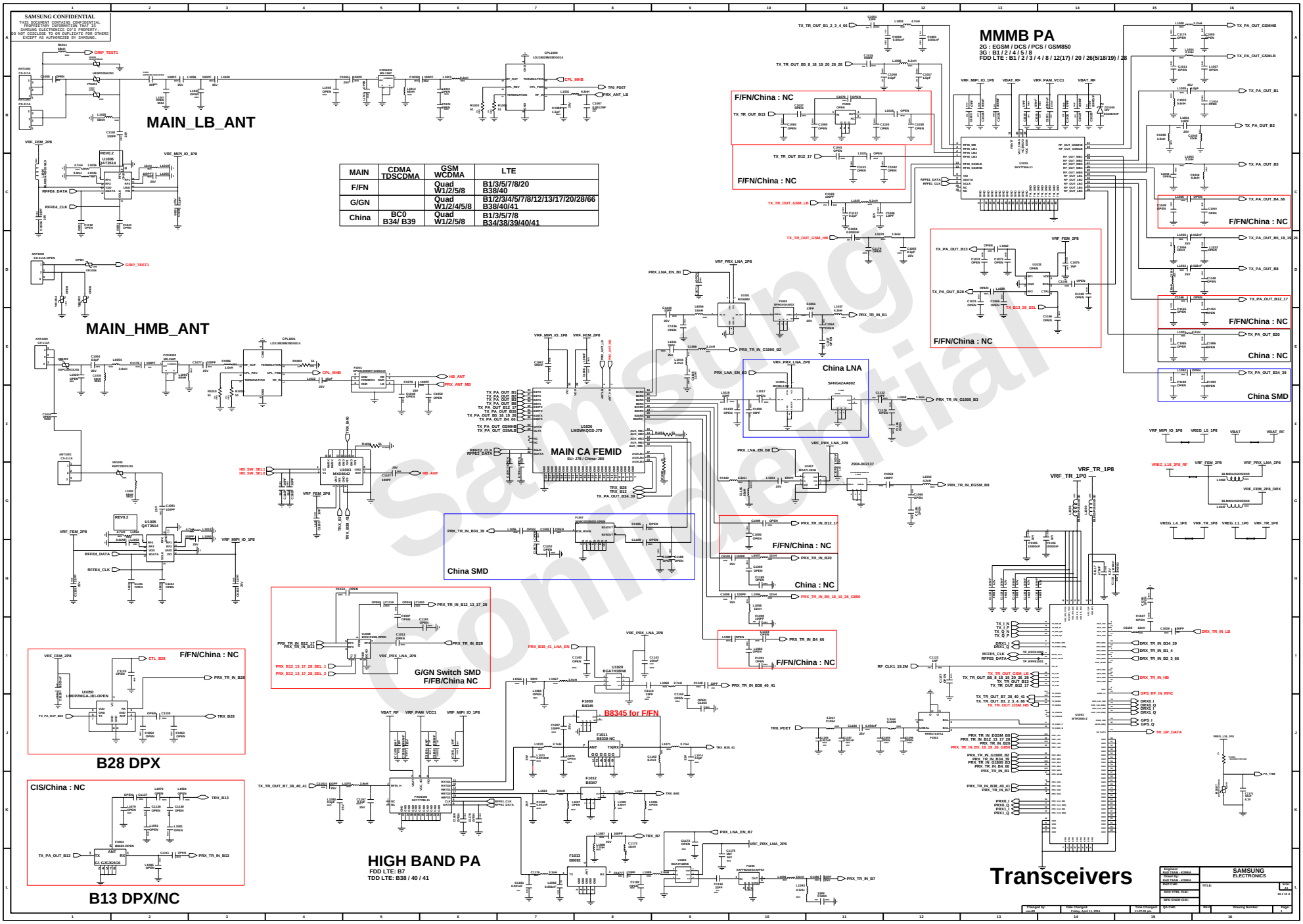

MAIN	CDMA TDSCDMA	GSM WCDMA	LTE
F/FN		Quad W1/2/5/8	B1/3/5/7/8/20 B38/40
G/GN		Quad W1/2/4/5/8	B1/2/3/4/5/7/8/12/13/17/20/28/66 B38/40/41
China	BC0 B34/ B39	Quad W1/2/5/8	B1/3/5/7/8 B34/38/39/40/41

Samsung Confidential

SAMSUNG CONFIDENTIAL
THIS DOCUMENT CONTAINS SAMSUNG ELECTRONICS CORPORATION PROPRIETARY INFORMATION THAT IS SAMSUNG ELECTRONICS CO'S PROPERTY. DISCLOSURE TO THIRD PARTIES OR USE OTHER THAN SUCH SUPPLY IS AUTHORIZED BY SAMSUNG.

Diversity	CDMA TDSCDMA	GSM WCDMA	LTE
F/FN		Quad W1/2/5/8	B1/3/5/7/8/20 B38/40
G/GN		Quad W1/2/4/5/8	B1/2/3/4/5/7/8/12/13/17/20/28/66 B38/40/41
China	BC0 B34/ B39	G850/900/1800 W1/5/8	B1/3/5/7/8 B34/38/39/40/41

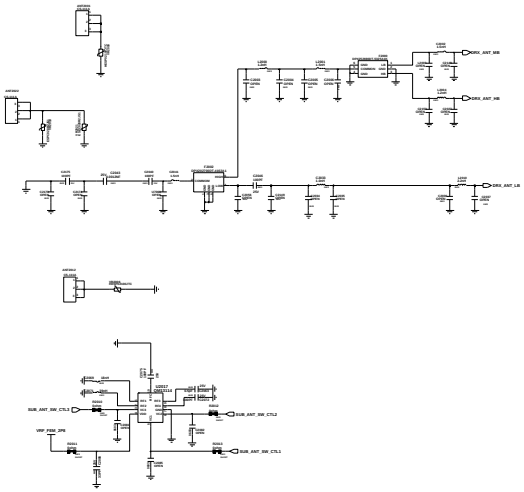

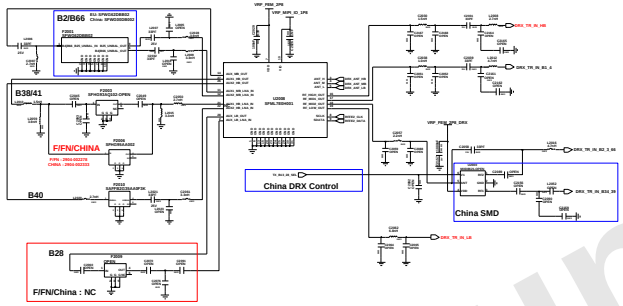

Diversity LNA FEM

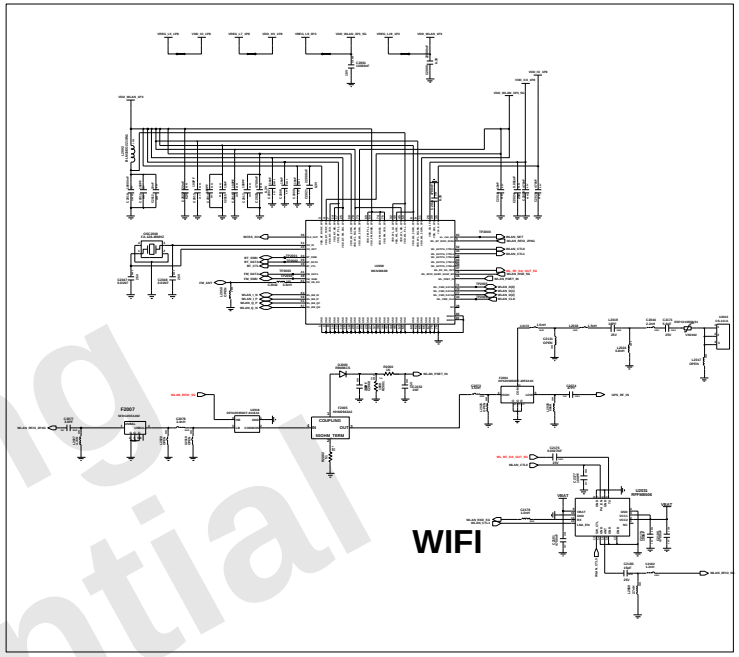

WIFI

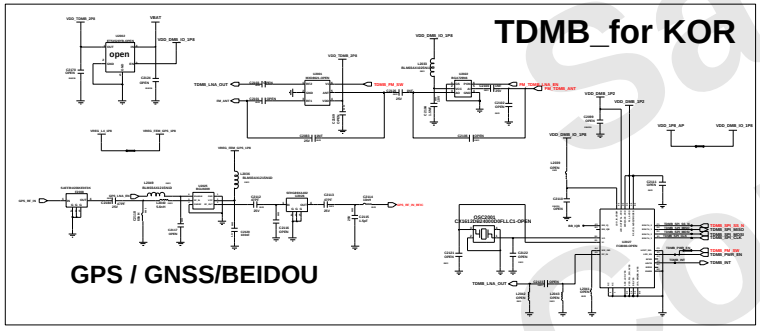

TDMB_for KOR

GPS / GNSS/BEIDOU

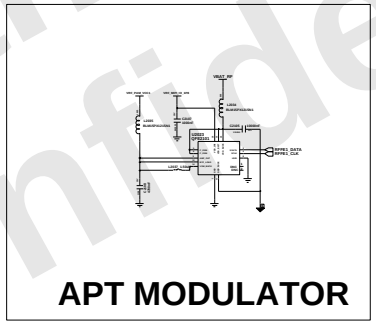

APT MODULATOR

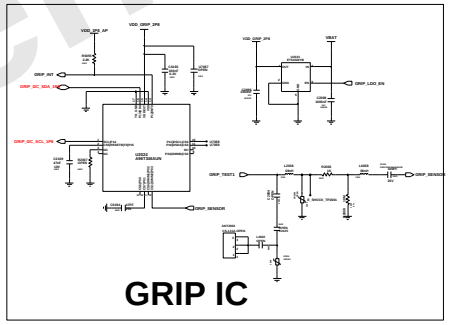

GRIP IC

NFC

nonNFC : NC

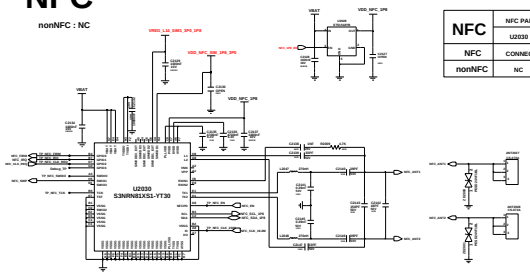

NFC	NFC PART	Power supply of SIM1		NFC GPIO140	
	U2030	R4021	R4022	R3029	R3058
NFC	CONNECT	short	open	100ohm	open
nonNFC	NC	open	short	open	100ohm

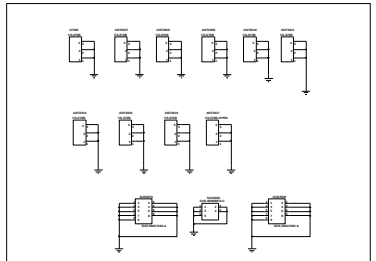

TOP Contact

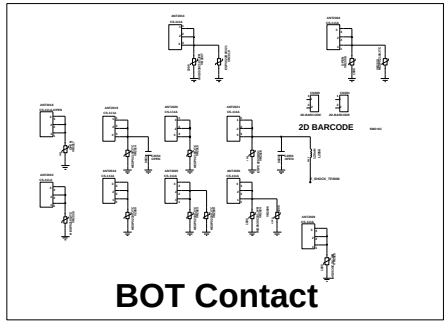

BOT Contact

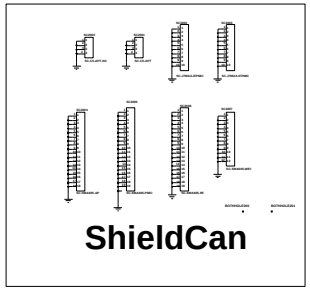

ShieldCan

Samsung Confidential

SAMSUNG CONFIDENTIAL
Unauthorized Copy Is Strictly Prohibited.
PROPRIETARY INFORMATION THAT IS
SAMSUNG ELECTRONICS CO'S PROPERTY
DO NOT DISCLOSE OR DISTRIBUTE WITHOUT
EXCEPT AS AUTHORIZED BY SAMSUNG.

UCP3001-2
SDM450-B01-AA

GPIO EXPANDER

I2C Pull up

Camera I2C Pull up

NEAR AP HOT-SPOT

UCP3001-1
SDM450-B01-AA

Samsung Confidential

PCB JTAG

JTAG CONNECTOR

BOOT OPTION

PCB H/W Revision

	HW REV.0	HW REV.1	HW REV.2
Bringup REV0.0	H	L	H
SDM450 REV0.1	L	L	H
J805FN_REV0.0	L	H	L
J805FN_REV0.1	L	H	H
J805FN_REV0.2	H	L	L

REGION

E	EUR (SM-J805FN)	E
	CIS (SM-J805FN)	E
G	MEA (SM-J805F)	M
	AFRICA (SM-J805F)	ME
M	LA_TPA & TTT (SM-J805GN)	L
	LA_ZTO (SM-J805GN)	LE
L	SEA (SM-805G)	G
	SWA (SM-J805G)	GE
A	CHN (SM-J805G)	C
C	KT	LA

MEMORY

MEMORY	R0806	R0804	R0802
3G/32G	SHORT	OPEN	OPEN
4G/64G	OPEN	SHORT	OPEN
4G/32G	OPEN	OPEN	SHORT

BTP

BTP LDO

FLIP Cover Detect

SAMSUNG ELECTRONICS

J7 POP

SAMSUNG CONFIDENTIAL
THIS DOCUMENT CONTAINS SAMSUNG ELECTRONICS CONFIDENTIAL PROPRIETARY INFORMATION THAT IS SAMSUNG ELECTRONICS CO'S PROPERTY. DISCLOSURE TO THIRD PARTIES OR ANY USE WITHOUT SUCH SUCH PRIOR AUTHORIZED BY SAMSUNG.

POWER

IF PMIC(MUIC+CHG+FG+BUCK+LDO)

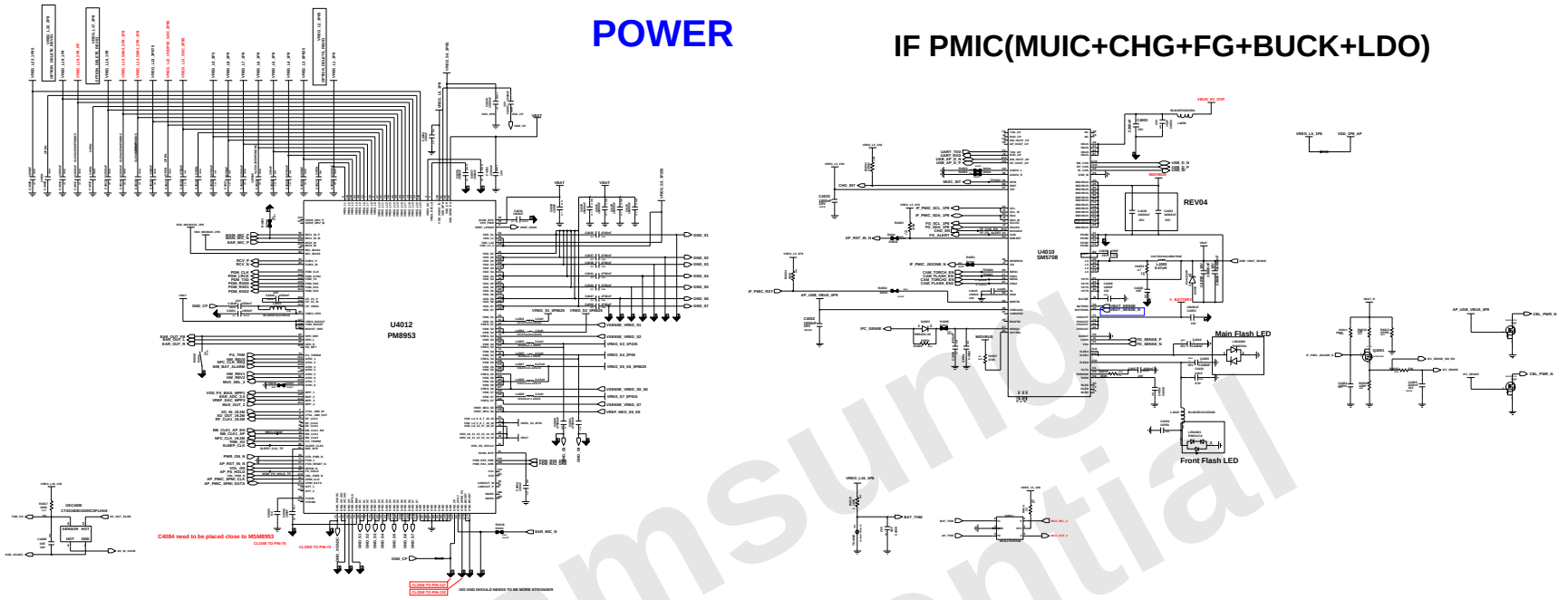

MAIN PMIC @ PM8953

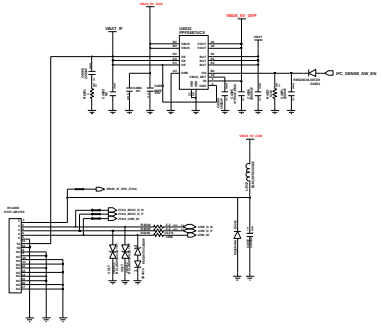

IF CON

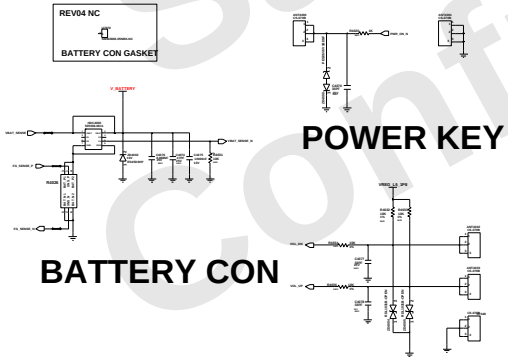

BATTERY CON

POWER KEY

VOLUME KEY

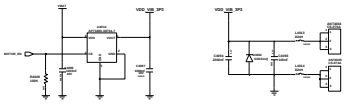

MOTOR

SIM & SD CARD

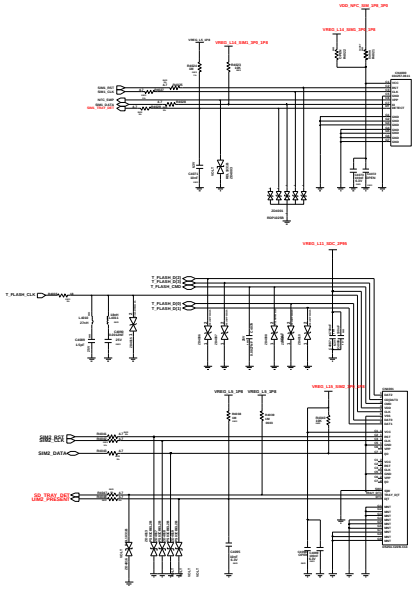

Samsung Confidential

SAMSUNG CONFIDENTIAL
THIS DOCUMENT CONTAINS CONFIDENTIAL
AND PROPRIETARY INFORMATION OF
SAMSUNG ELECTRONICS CO'S PROPERTY.
DO NOT DISCLOSE TO OR DUPLICATE FOR OTHERS
EXCEPT AS AUTHORIZED BY SAMSUNG.

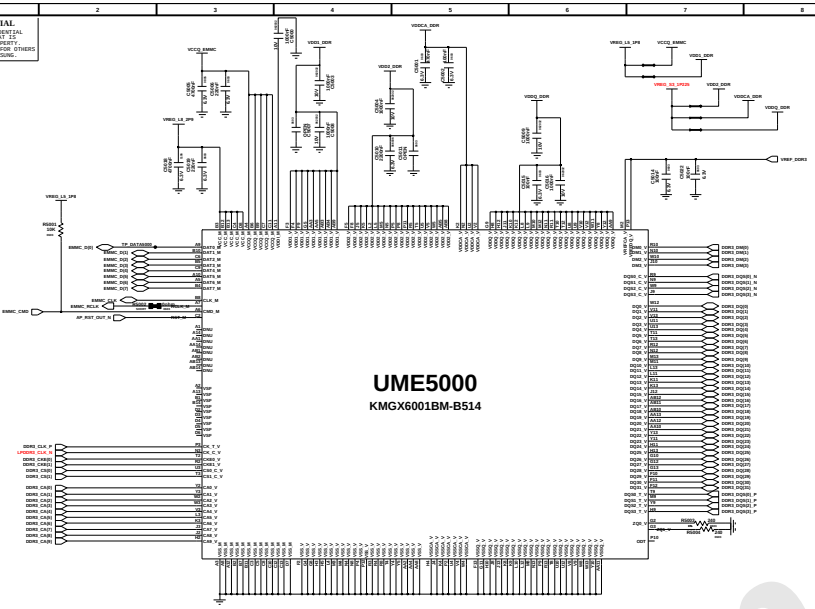

REGION	ROM	RAM
EUR	32	3
CIS	32	3
LA	32	3
LA(Brazil)	64	4
SEA	32	4
SWA	64	4
MEA	64	4
AFR	32	3
KOR	32	3
CHN	64	4

KMGX6001BM-B514 , 32GB +24Gb (1108-000638)

AUDIO PART

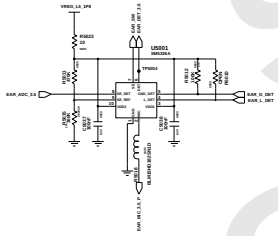

EAR_DETECT

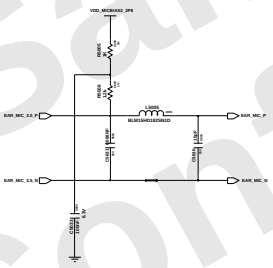

Ear MIC

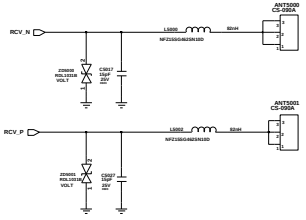

RCV CONTACT

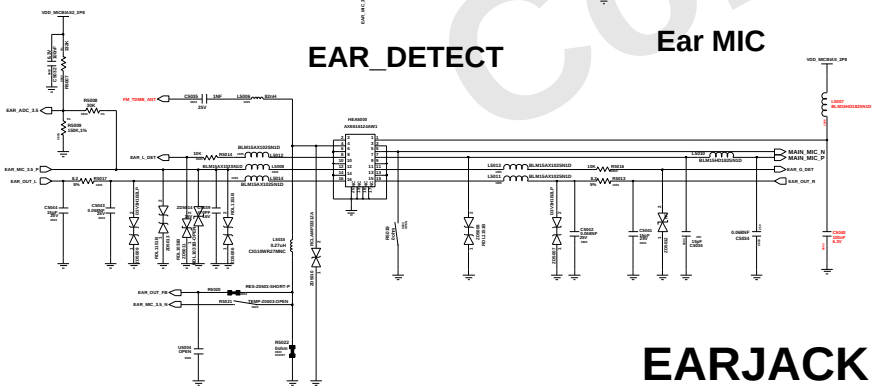

EARJACK Ass'Y

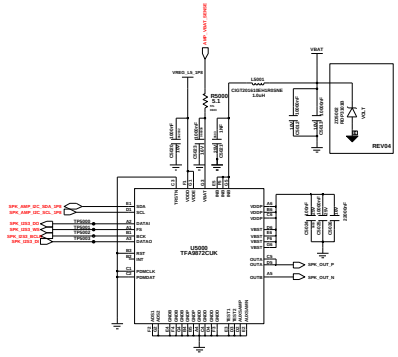

SPK AMP

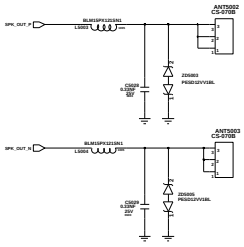

SPK CONTACT

Engineer	AUDIO / MOTOR / KEY
Design By	
R&D CHK:	TITLE: J7 POP
DOC CTRL CHK:	
MFG ENGR CHK:	
QA CHK:	Drawing Number / S/N

Samsung Confidential

SAMSUNG CONFIDENTIAL
THIS DOCUMENT CONTAINS CONFIDENTIAL AND PROPRIETARY INFORMATION OF SAMSUNG ELECTRONICS CO'S PROPERTY. DO NOT DISCLOSE TO OR DUPLICATE FOR OTHERS EXCEPT AS AUTHORIZED BY SAMSUNG.

CAMERA PART

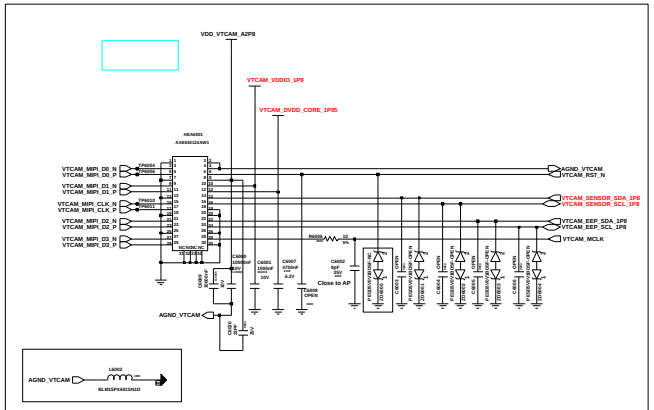

VT CAMERA 24MP Tetra 30 Pin conn 2017.10.23

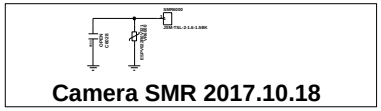

Camera SMR 2017.10.18

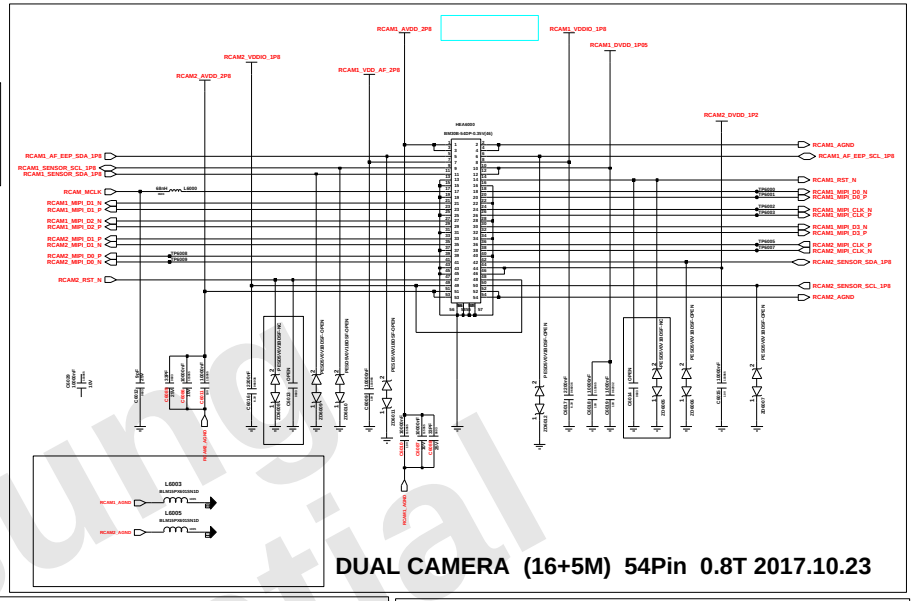

DUAL CAMERA (16+5M) 54Pin 0.8T 2017.10.23

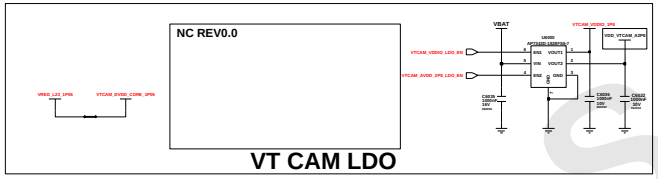

VT CAM LDO

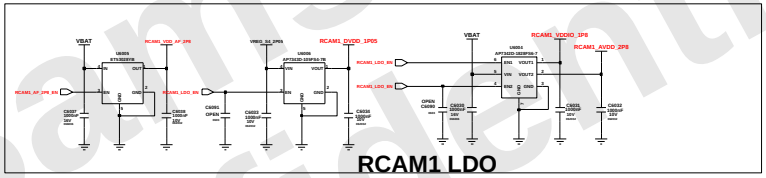

RCAM1 LDO

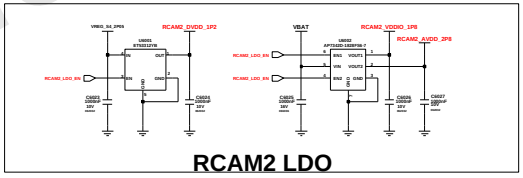

RCAM2 LDO

DISPLAY

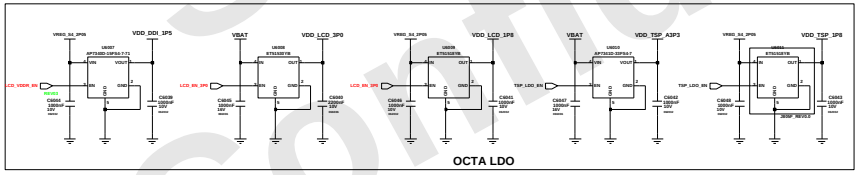

OCTA LDO

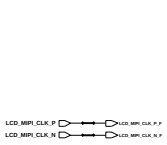

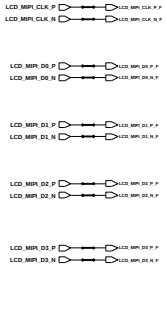

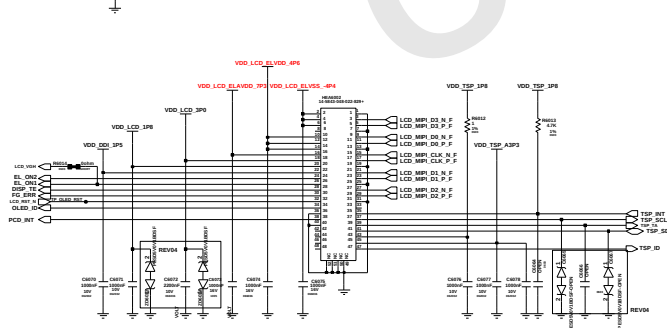

DISPLAY

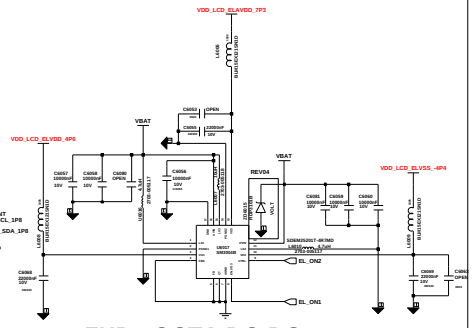

FHD+ OCTA DC-DC

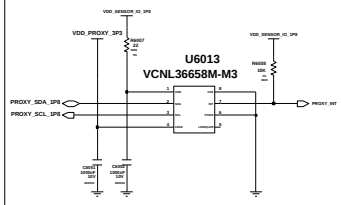

Proxi Sensor

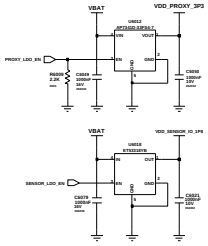

SENSOR LDO

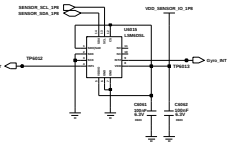

6 Axis Sensor(ACC + GYRO)

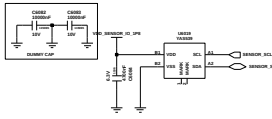

Magnetic Sensor

SENSOR

Engineer:	CAMERA, DISPLAY, MHL
Section Sgn:	
R&D CHK:	TITLE:
DOC CTRL CHK:	
MFG ENGR CHK:	
QA CHK:	REV: / Drawing Number: / Page:

Changed By: / Date Changed: / Total Change:

Samsung Confidential

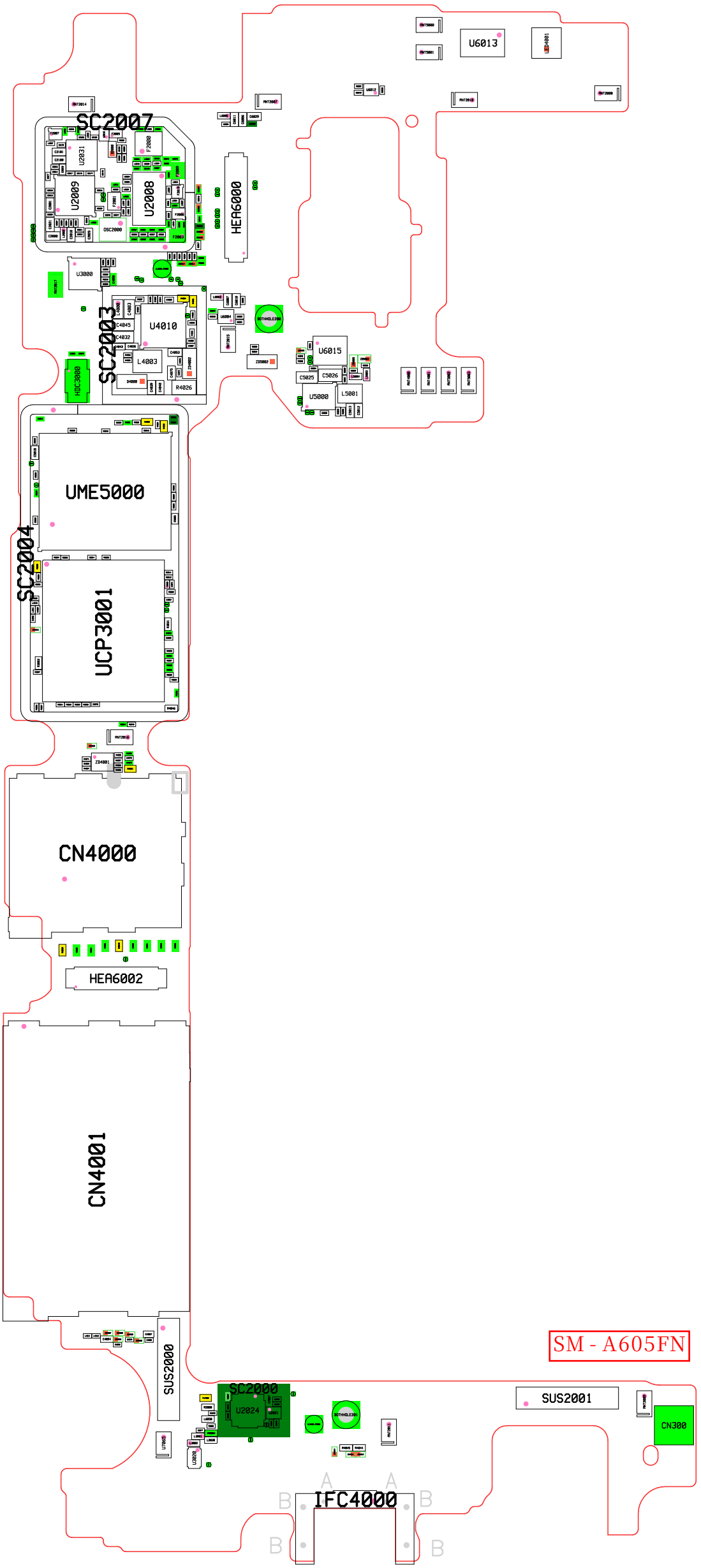
SC2007
U2031
U2009
U2008
F2000
OSC2000
HEA6000
U3000
SC2003
U4010
C4045
C4032
L4003
HDC3000
D4000
R4026
U6013
U6015
C5025
C5026
U5000
L5001
UME5000
SC2004
UCP3001
CN4000
HEA6002
CN4001
SUS2000
SC2000
U2024
SUS2001
CN300
IFC4000
SM - A605FN

HEA6001
U2013
U2030
LED4000
U7070
HDC4000
OSC4000
U4012
SC2005
SUS2002
SC2002
U6016
U6017
SC2001
U1053
SC2006
U1015
U1036
PAM1000
CON1001
CON1000
CN301
HEA5000
U4013
U5001

SM - A605FN

SM - A605F

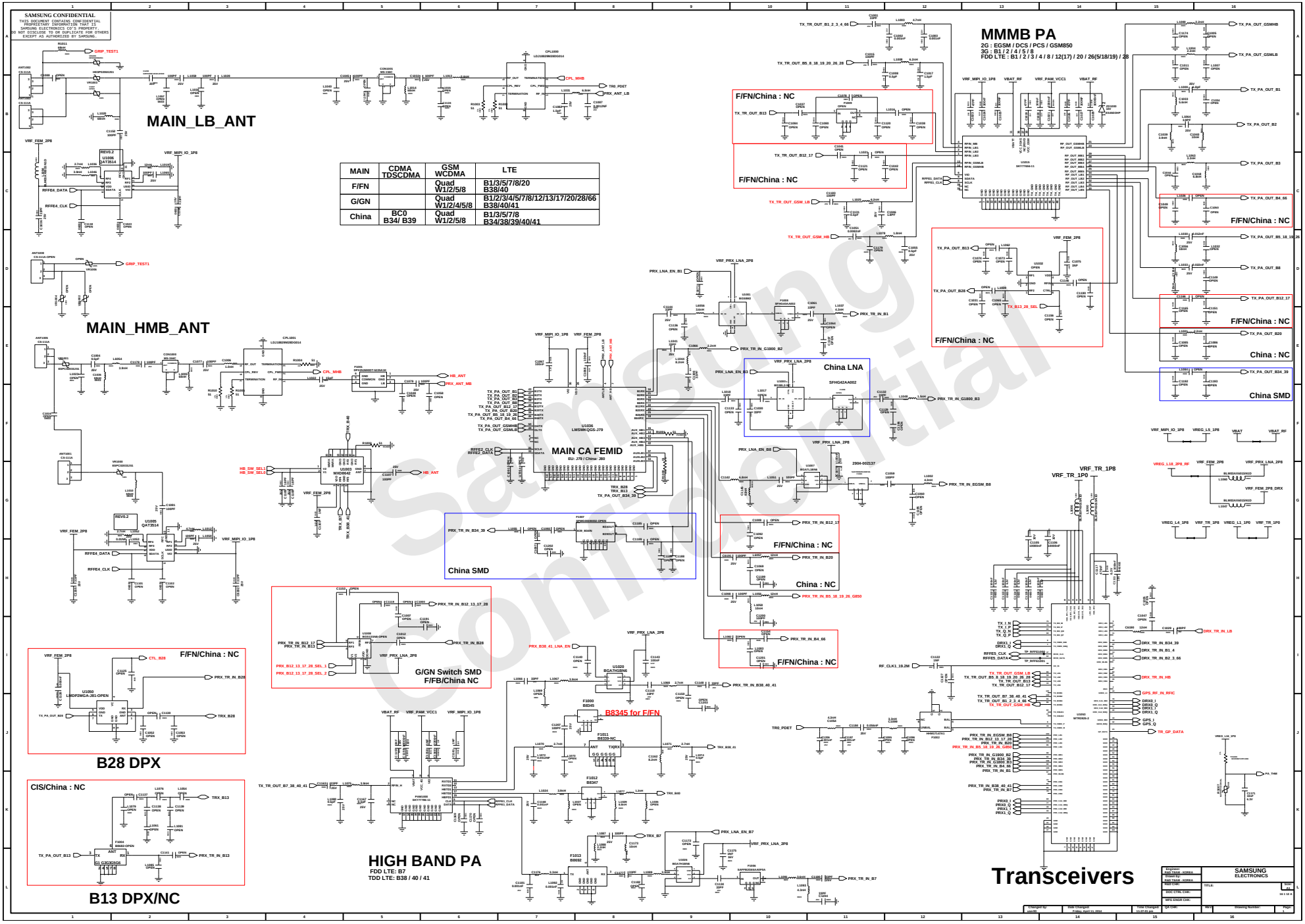

MAIN	CDMA TDSCDMA	GSM WCDMA	LTE
F/FN		Quad W1/2/5/8	B1/3/5/7/8/20 B38/40
G/GN		Quad W1/2/4/5/8	B1/2/3/4/5/7/8/12/13/17/20/28/66 B38/40/41
China	BC0 B34/ B39	Quad W1/2/5/8	B1/3/5/7/8 B34/38/39/40/41

Samsung Confidential

SAMSUNG CONFIDENTIAL
THIS DOCUMENT CONTAINS SAMSUNG ELECTRONICS CORPORATION PROPRIETARY INFORMATION THAT IS SAMSUNG ELECTRONICS CO'S PROPERTY. DISCLOSURE TO THIRD PARTIES OR USE WITHOUT WRITTEN AUTHORIZATION BY SAMSUNG, IS STRICTLY NOT AUTHORIZED BY SAMSUNG.

Diversity	CDMA TDSCDMA	GSM WCDMA	LTE
F/FN		Quad W1/2/5/8	B1/3/5/7/8/20 B38/40
G/GN		Quad W1/2/4/5/8	B1/2/3/4/5/7/8/12/13/17/20/28/66 B38/40/41
China	BC0 B34/ B39	GSM850/900/1800 W1/5/8	B1/3/5/7/8 B34/38/39/40/41

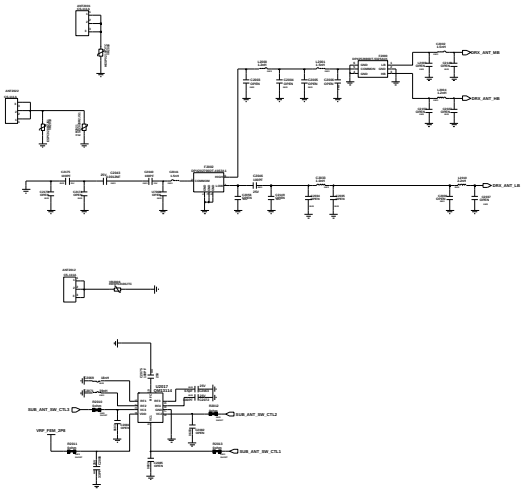

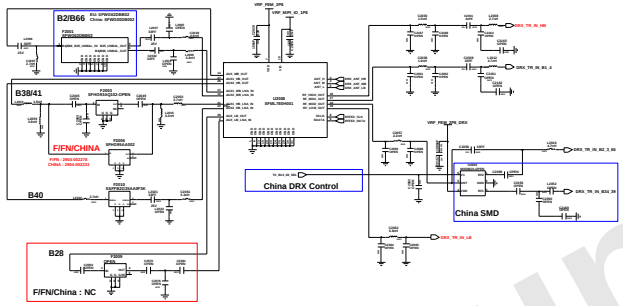

Diversity LNA FEM

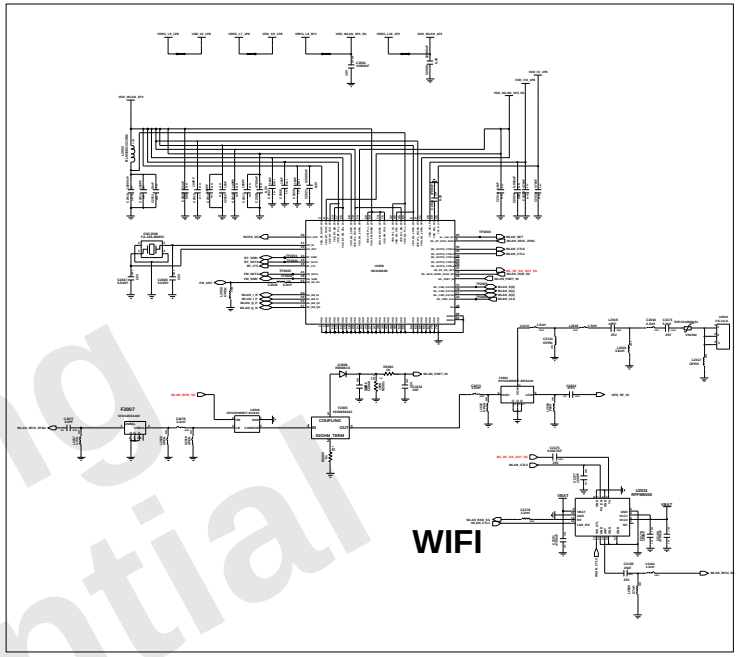

WIFI

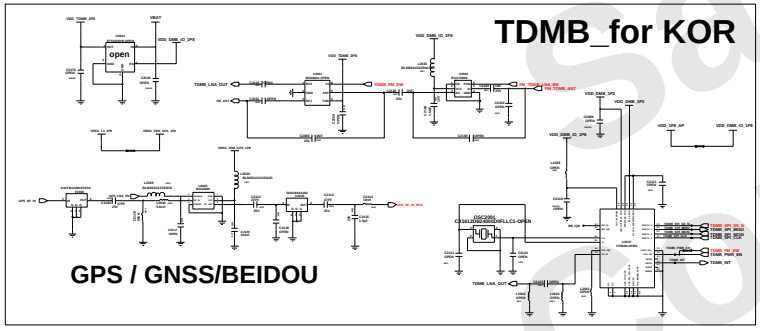

TDMB_for KOR

GPS / GNSS/BEIDOU

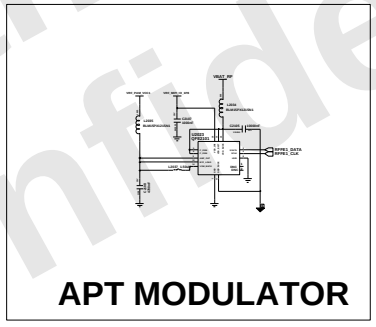

APT MODULATOR

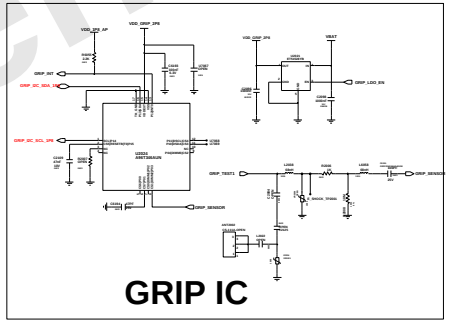

GRIP IC

NFC

nonNFC : NC

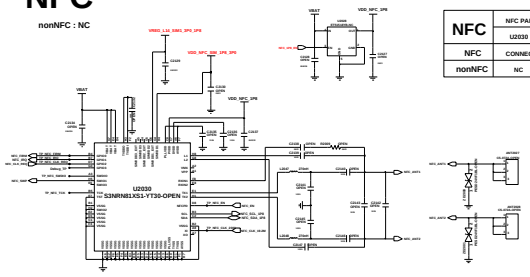

NFC	NFC PART	Power supply of SIM1		NFC GPIO140	
	U2030	R4021	R4022	R3029	R3058
NFC	CONNECT	short	open	100ohm	open
nonNFC	NC	open	short	open	100ohm

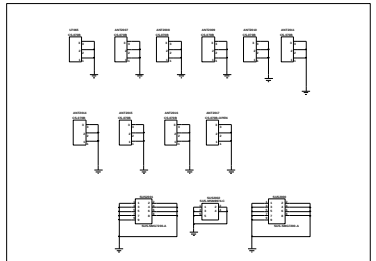

TOP Contact

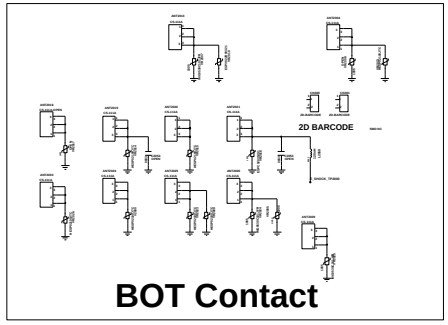

BOT Contact

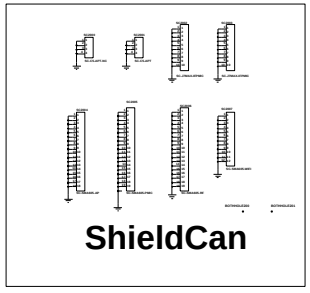

ShieldCan

Samsung Confidential

SAMSUNG CONFIDENTIAL
Unauthorized Copy Is Strictly Prohibited.
PROPRIETARY INFORMATION THAT IS
SAMSUNG ELECTRONICS CO'S PROPERTY.
DO NOT DISCLOSE OR DISTRIBUTE WITHOUT SAMSUNG
SIGNOFF OR AUTHORIZED BY SAMSUNG.

UCP3001-2
SDM450-B01-AA

GPIO EXPANDER

I2C Pull up

Camera I2C Pull up

NEAR AP HOT-SPOT

UCP3001-1
SDM450-B01-AA

Samsung Confidential

PCB JTAG

JTAG CONNECTOR

BOOT OPTION

PCB H/W Revision

	HW REV.0	HW REV.1	HW REV.2
Bringup REV0.0	H	L	H
SDM450 REV0.1	L	L	H
J805FN_REV0.0	L	H	L
J805FN_REV0.1	L	H	H
J805FN_REV0.2	H	L	L

REGION

E	EUR (SM-J805FN)	E
	CIS (SM-J805FN)	E
G	MEA (SM-J805F)	M
	AFRICA (SM-J805F)	ME
M	LA_TPA & TTT (SM-J805GN)	L
	LA_ZTO (SM-J805GN)	LE
L	SEA (SM-805G)	G
	SWA (SM-J805G)	GE
A	CHN (SM-J805G)	C
C	KT	LA

MEMORY

MEMORY	RS000	RS001	RS002
3G/32G	SHORT	OPEN	OPEN
4G/64G	OPEN	SHORT	OPEN
4G/32G	OPEN	OPEN	SHORT

BTP

BTP LDO

FLIP Cover Detect

Engineer:		SAMSUNG ELECTRONICS	
Model:			
Project:			
Board:			
Schematic Name:		J7 POP	
Schematic Number:			
Copyright for Samsung	Date Managed:	Date Managed:	Sub Code:
Date:	Sheet:	Drawing Number:	Rev:

SAMSUNG CONFIDENTIAL
THIS DOCUMENT CONTAINS SAMSUNG ELECTRONICS CONFIDENTIAL PROPRIETARY INFORMATION THAT IS SAMSUNG ELECTRONICS CO'S PROPERTY. DISCLOSURE TO THIRD PARTIES OR ANY USE WITHOUT SUCH RECEIPT IS AUTHORIZED BY SAMSUNG.

POWER

IF PMIC(MUIC+CHG+FG+BUCK+LDO)

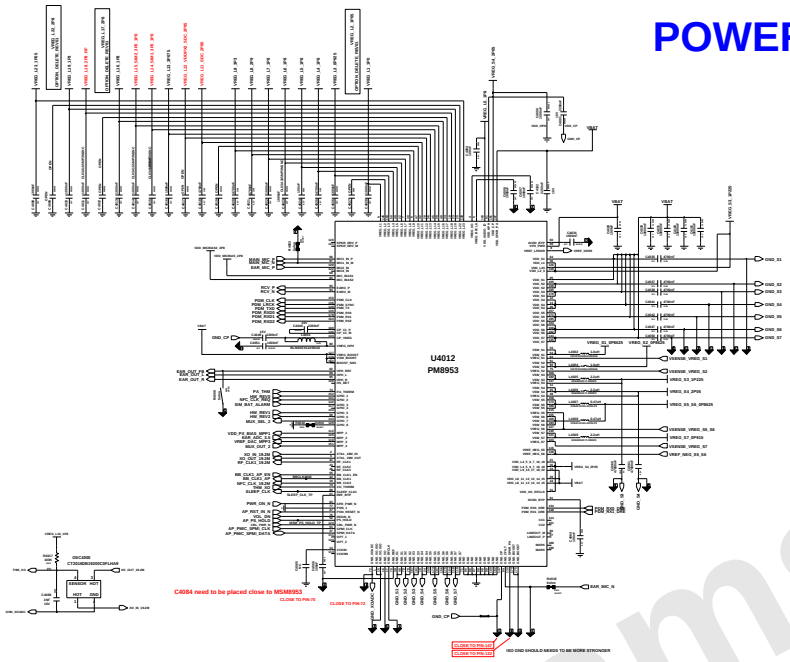

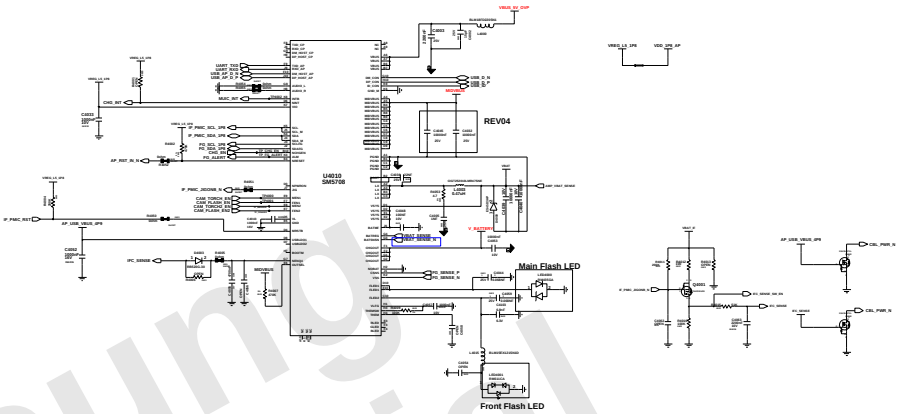

MAIN PMIC @ PM8953

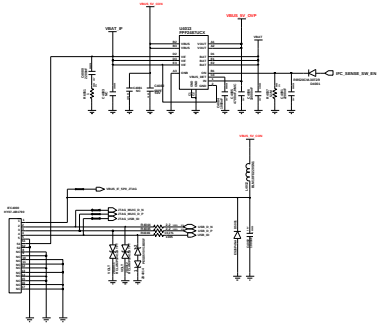

IF CON

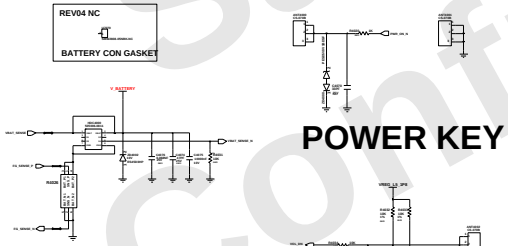

BATTERY CON

POWER KEY

VOLUME KEY

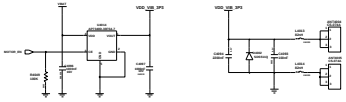

MOTOR

SIM & SD CARD

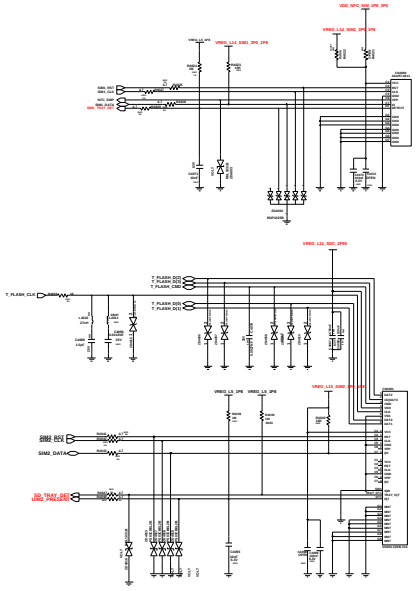

Samsung Confidential

SAMSUNG CONFIDENTIAL
THIS DOCUMENT CONTAINS CONFIDENTIAL
AND PROPRIETARY INFORMATION OF
SAMSUNG ELECTRONICS CO'S PROPERTY.
DO NOT DISCLOSE TO OR DUPLICATE FOR OTHERS
EXCEPT AS AUTHORIZED BY SAMSUNG.

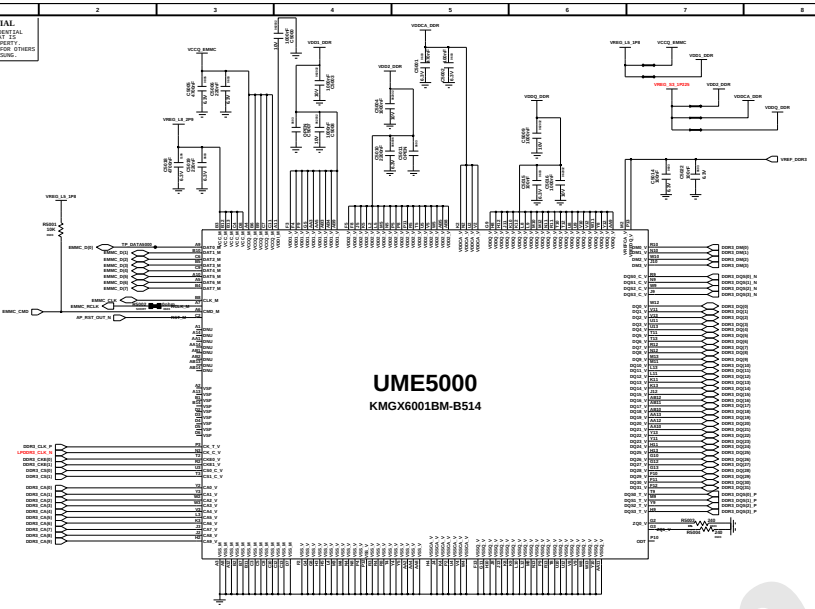

REGION	ROM	RAM
EUR	32	3
CIS	32	3
LA	32	3
LA(Brazil)	64	4
SEA	32	4
SWA	64	4
MEA	64	4
AFR	32	3
KOR	32	3
CHN	64	4

KMGX6001BM-B514 , 32GB +24Gb (1108-000638)

AUDIO PART

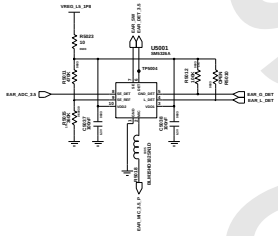

EAR_DETECT

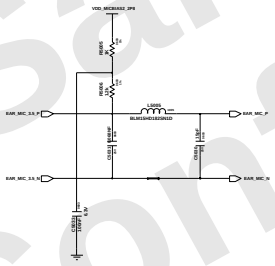

Ear MIC

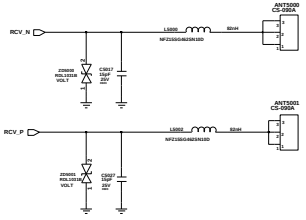

RCV CONTACT

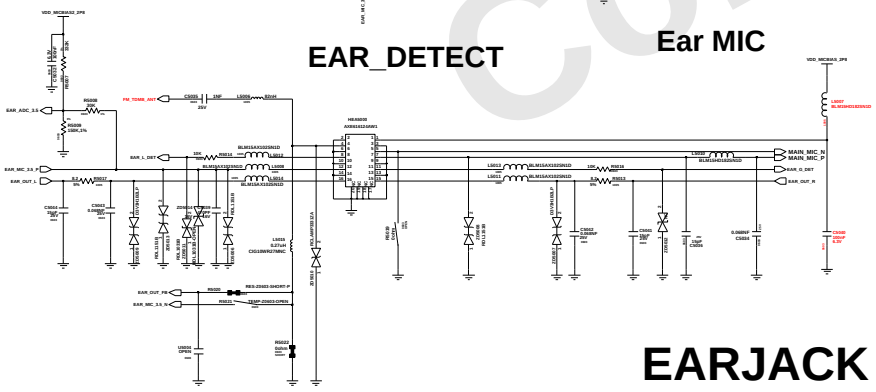

EARJACK Ass'Y

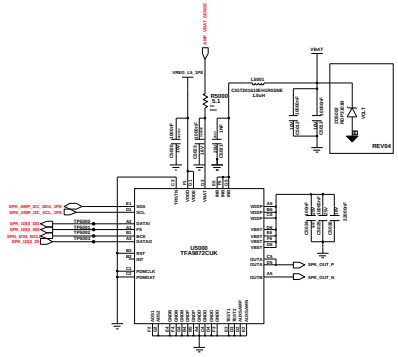

SPK AMP

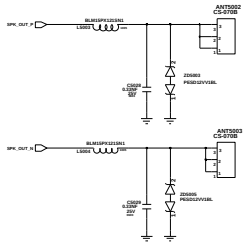

SPK CONTACT

Engineer	AUDIO / MOTOR / KEY
Design By	
R&D CHK	TITLE: J7 POP
DOC CTRL CHK	
MFG ENGR CHK	
QA CHK	Drawing Number / S/N

Samsung Confidential

SAMSUNG CONFIDENTIAL
THIS DOCUMENT CONTAINS CONFIDENTIAL AND PROPRIETARY INFORMATION OF SAMSUNG ELECTRONICS CO'S PROPERTY. DO NOT DISCLOSE TO OR DUPLICATE FOR OTHERS EXCEPT AS AUTHORIZED BY SAMSUNG.

CAMERA PART

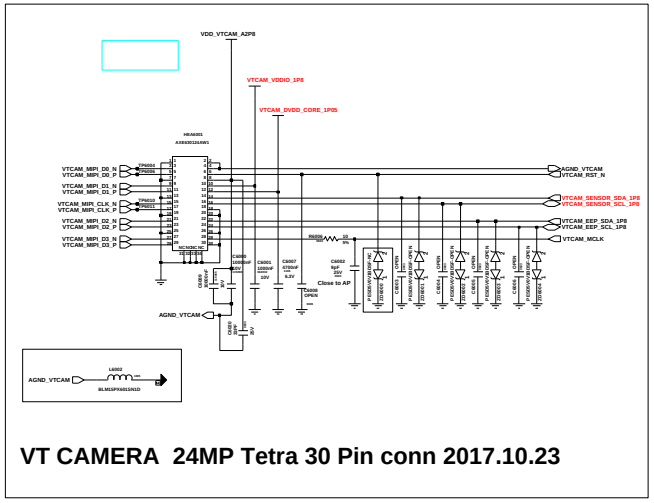

VT CAMERA 24MP Tetra 30 Pin conn 2017.10.23

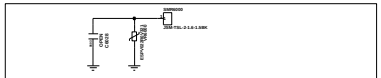

Camera SMR 2017.10.18

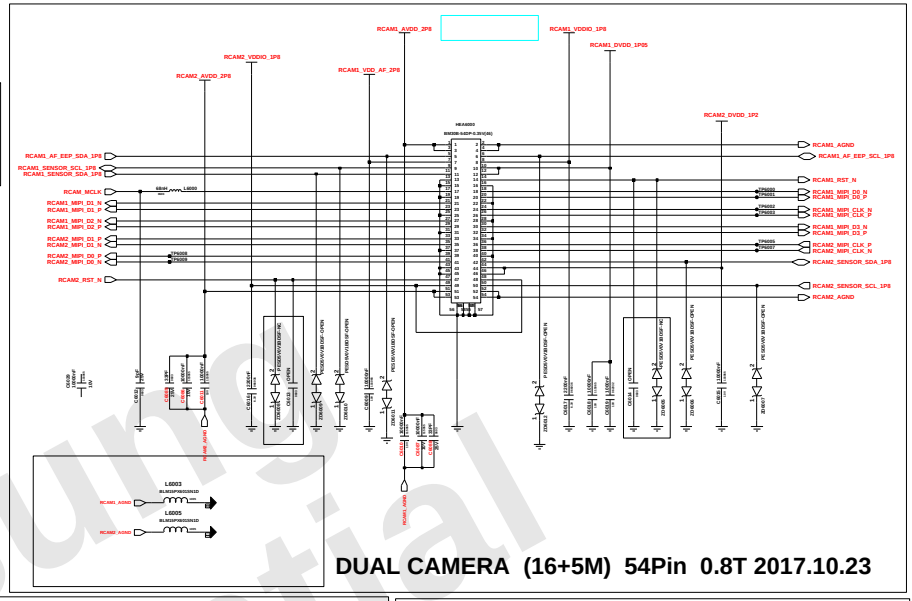

DUAL CAMERA (16+5M) 54Pin 0.8T 2017.10.23

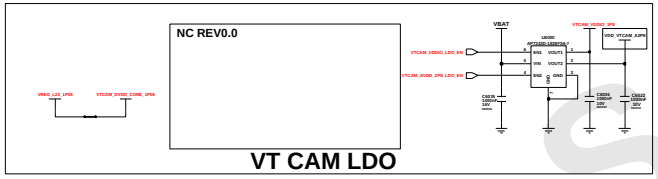

VT CAM LDO

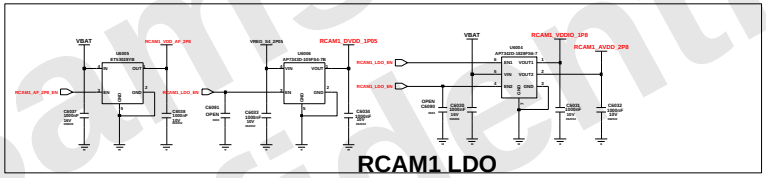

RCAM1 LDO

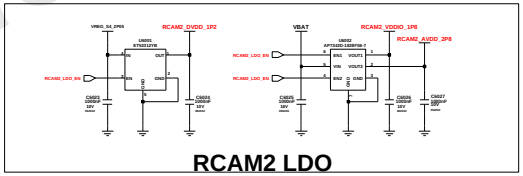

RCAM2 LDO

DISPLAY

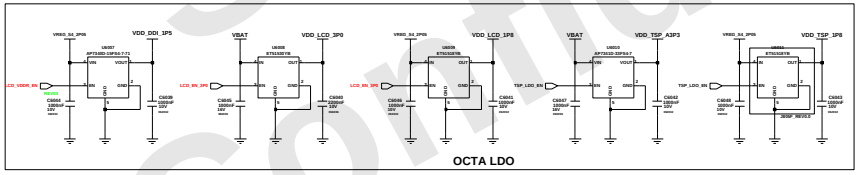

OCTA LDO

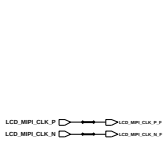

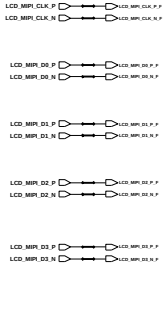

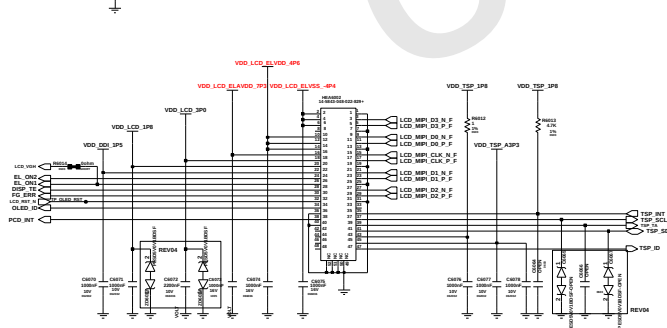

DISPLAY

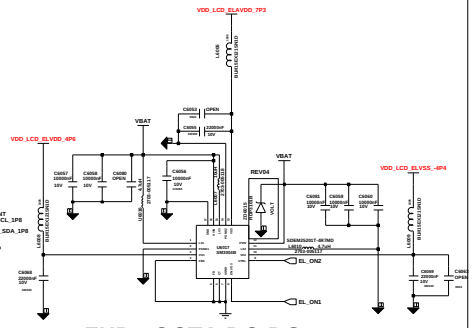

FHD+ OCTA DC-DC

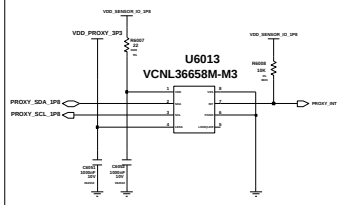

Proxi Sensor

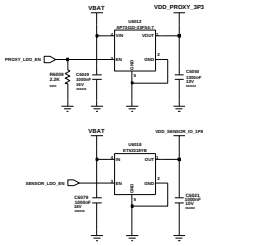

SENSOR LDO

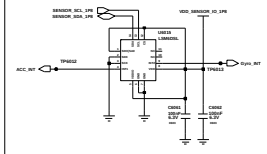

6 Axis Sensor(ACC + GYRO)

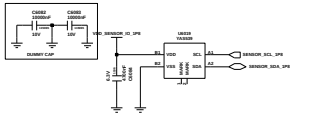

Magnetic Sensor

SENSOR

Engineer:	CAMERA, DISPLAY, MHL
Sensor Sp:	
RED CHK:	TITLE:
DOC CTRL CHK:	
MFG ENGR CHK:	
QA CHK:	REV: / Drawing Number: / Page:

Changed By: / Date Changed: / Time Changed:

Samsung Confidential

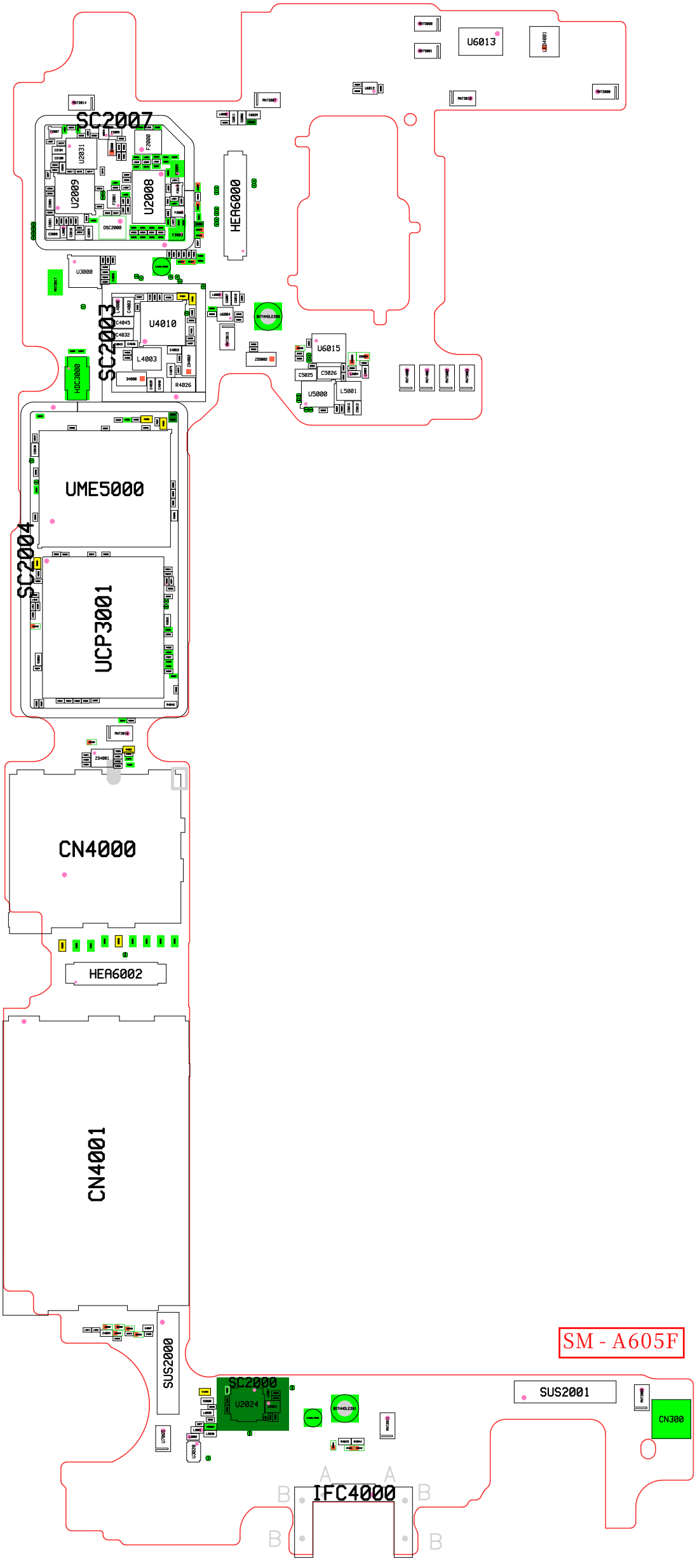
SC2007
U2031
U2009
U2008
F2000
OSC2000
HEA6000
U3000
SC2003
U4010
C4045
C4032
L4003
D4000
R4026
HDC3000
U6013
U6015
C5025
C5026
U5000
L5001
UME5000
SC2004
UCP3001
CN4000
HEA6002
CN4001
SUS2000
SC2000
U2024
SUS2001
CN300
IFC4000
SM - A605F

HEA6001
U2013
U2030
LED4000
U7070
HDC4000
OSC4000
U4012
SC2005
SUS2002
SC2002
U6016
U6017
L6007
C6055
L6010
U2027
SC2001
U1053
SC2006
U1015
U1036
PAM1000
F1013
F1001
U1003
CON1001
CON1008
SM - A605F
CN301
HEA5000
U4013
U5001

SM - A605GN

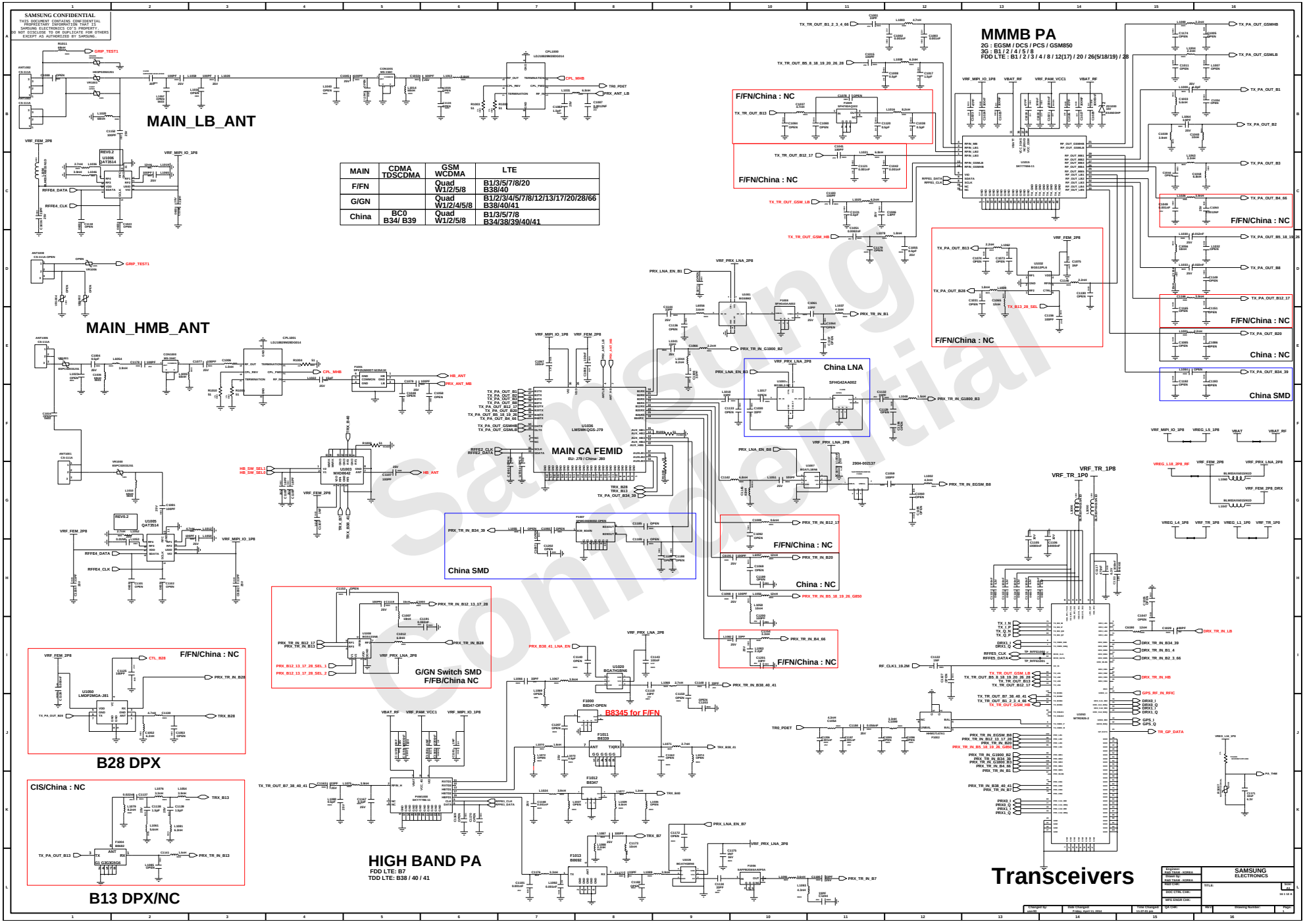

MAIN	CDMA TDSCDMA	GSM WCDMA	LTE
F/FN		Quad W1/2/5/8	B1/3/5/7/8/20 B38/40
G/GN		Quad W1/2/4/5/8	B1/2/3/4/5/7/8/12/13/17/20/28/66 B38/40/41
China	BC0 B34/ B39	Quad W1/2/5/8	B1/3/5/7/8 B34/38/39/40/41

Samsung Confidential

SAMSUNG CONFIDENTIAL
THIS DOCUMENT CONTAINS SAMSUNG ELECTRONICS' PROPRIETARY INFORMATION THAT IS SAMSUNG ELECTRONICS CO'S PROPERTY. DISCLOSURE, REPRODUCTION OR USE WITHOUT WRITTEN CONSENT OF SAMSUNG ELECTRONICS CO IS PROHIBITED BY SAMSUNG.

Diversity	CDMA TDSCDMA	GSM WCDMA	LTE
F/FN		Quad W1/2/5/8	B1/3/5/7/8/20 B38/40
G/GN		Quad W1/2/4/5/8	B1/2/3/4/5/7/8/12/13/17/20/28/66 B38/40/41
China	BC0 B34/ B39	G850/900/1800 W1/5/8	B1/3/5/7/8 B34/38/39/40/41

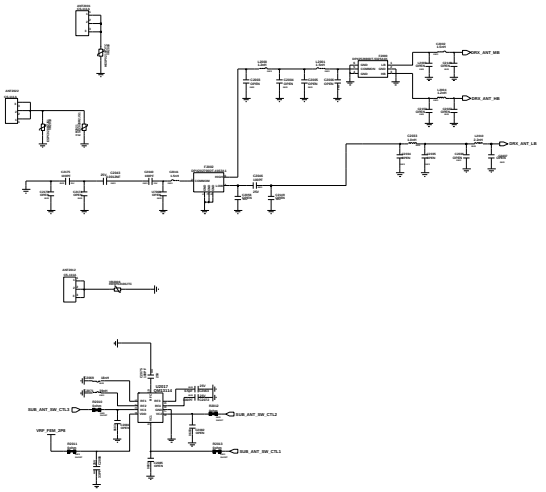

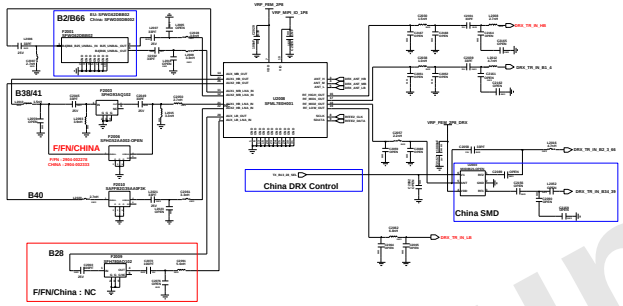

Diversity LNA FEM

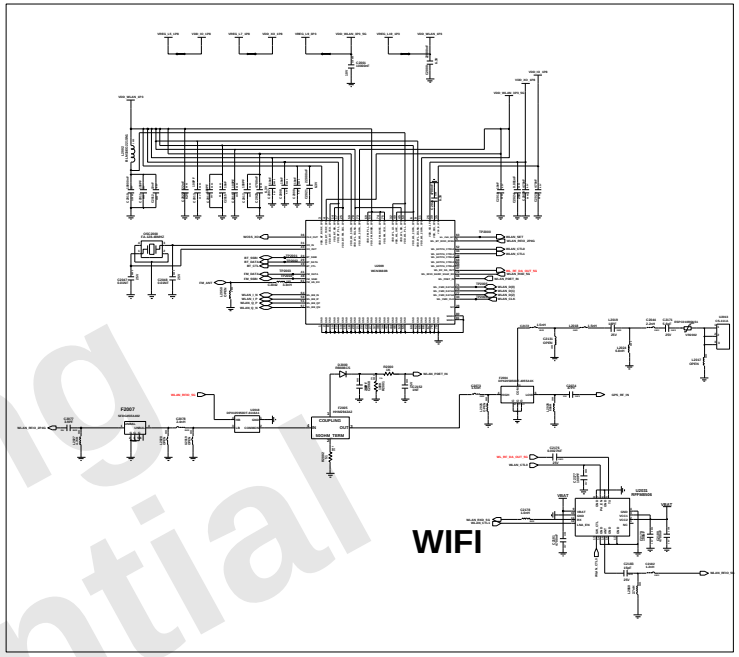

WIFI

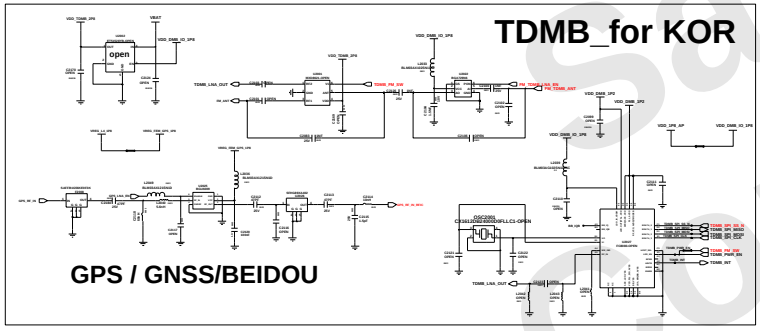

GPS / GNSS/BEIDOU

TDMB_for KOR

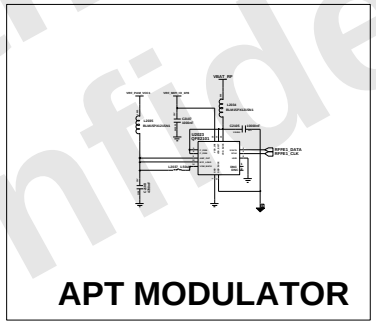

APT MODULATOR

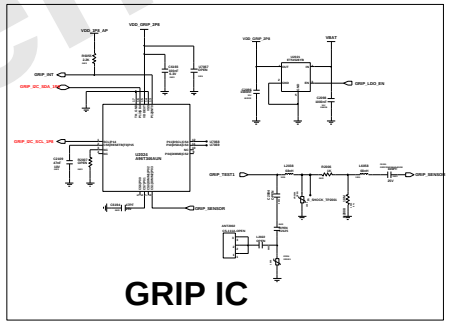

GRIP IC

NFC

nonNFC : NC

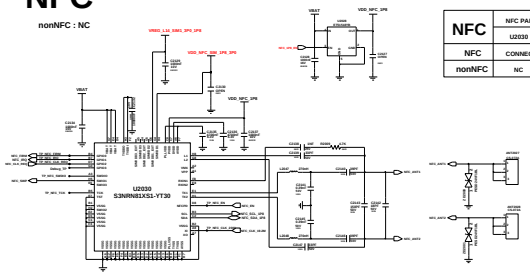

NFC	NFC PART	Power supply of SIM1		NFC GPIO140	
	U2030	R4021	R4022	R3029	R3058
NFC	CONNECT	short	open	100ohm	open
nonNFC	NC	open	short	open	100ohm

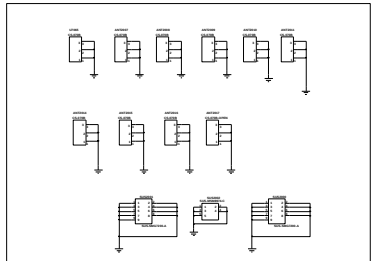

TOP Contact

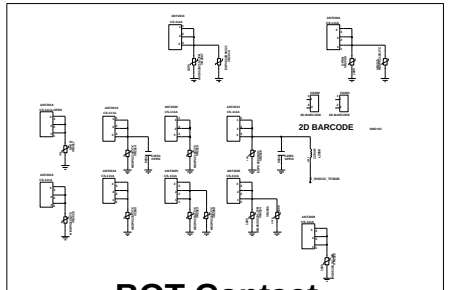

2D BARCODE

BOT Contact

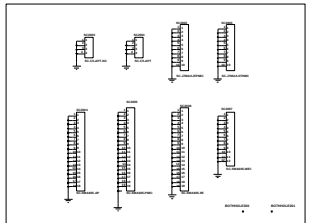

ShieldCan

Samsung Confidential

SAMSUNG CONFIDENTIAL
THIS DOCUMENT CONTAINS SAMSUNG ELECTRONICS CORPORATION PROPRIETARY INFORMATION THAT IS SAMSUNG ELECTRONICS CO'S PROPERTY. DISCLOSURE, REPRODUCTION OR USE WITHOUT WRITTEN CONSENT OF SAMSUNG ELECTRONICS CO'S AUTHORIZED BY SAMSUNG.

UCP3001-2
SDM450-B01-AA

GPIO EXPANDER

I2C Pull up

Camera I2C Pull up

NEAR AP HOT-SPOT

UCP3001-1
SDM450-B01-AA

PCB JTAG

JTAG CONNECTOR

BOOT OPTION

PCB H/W Revision

	HW REV.0	HW REV.1	HW REV.2
Bringup REV0.2	H	L	H
SDM450 REV0.3	L	L	H
J805FN_REV0.0	L	H	L
J805FN_REV0.1	L	H	H
J805FN_REV0.2	H	L	L

REGION

E	EUR (SM-J805FN)	E
	CIS (SM-J805FN)	E
G	MEA (SM-J805F)	M
	AFRICA (SM-J805F)	ME
M	LA_TPA & TTT (SM-J805GN)	L
	LA_ZTO (SM-J805GN)	LE
L	SEA (SM-805G)	G
	SWA (SM-J805G)	GE
A	CHN (SM-J805I)	C
	KT	LA
C		

MEMORY

MEMORY	RS000	RS001	RS002
3G/32G	SHORT	OPEN	OPEN
4G/64G	OPEN	SHORT	OPEN
4G/32G	OPEN	OPEN	SHORT

BTP

BTP LDO

FLIP Cover Detect

Engineer		SAMSUNG ELECTRONICS	
Model			
Project		J7 POP	
Date			
Drawing Number			Page

Samsung Confidential

SAMSUNG CONFIDENTIAL
THIS DOCUMENT CONTAINS SAMSUNG ELECTRONICS PROPRIETARY INFORMATION THAT IS SAMSUNG ELECTRONICS CO'S PROPERTY. DO NOT DISCLOSE THIS DOCUMENT TO ANY OTHER PARTY WITHOUT SAMSUNG ELECTRONICS CO'S WRITTEN AUTHORIZATION.

POWER

IF PMIC(MUIC+CHG+FG+BUCK+LDO)

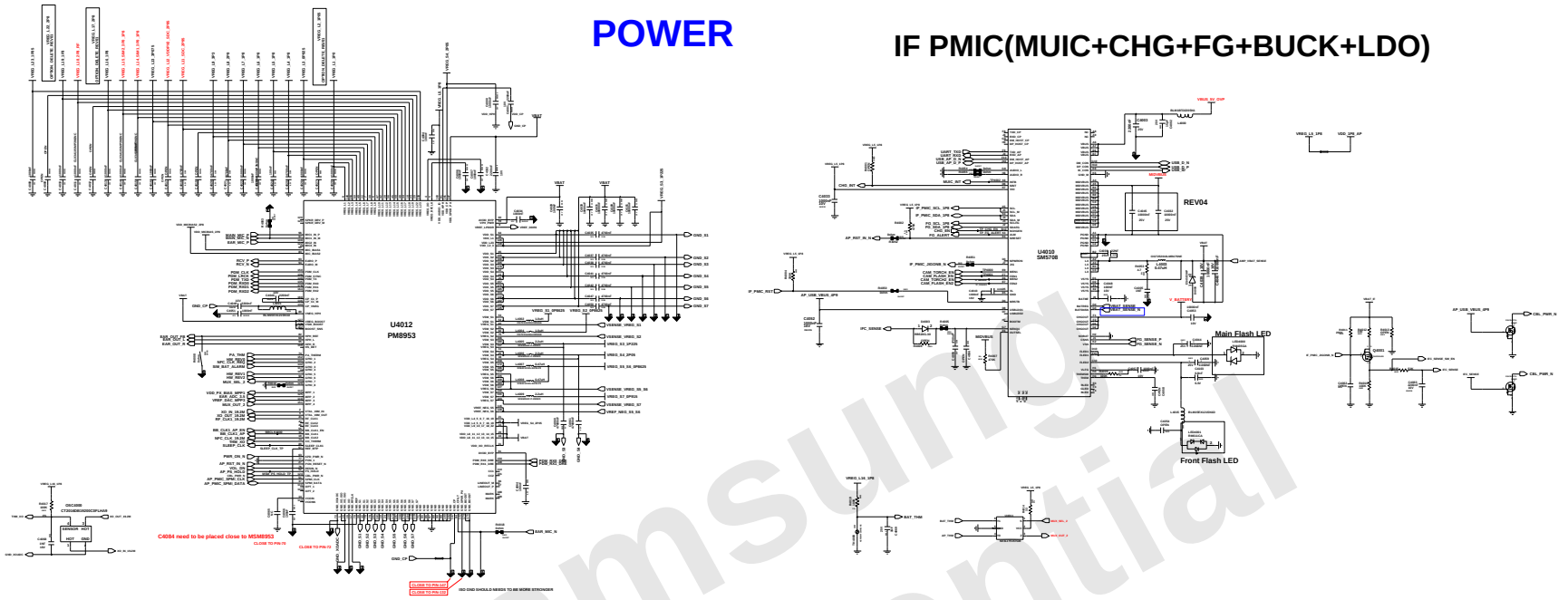

MAIN PMIC @ PM8953

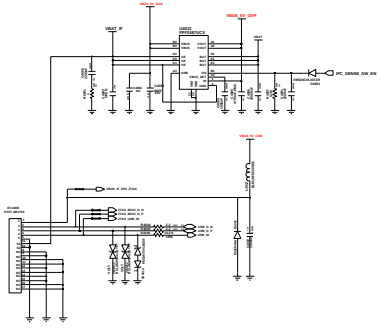

IF CON

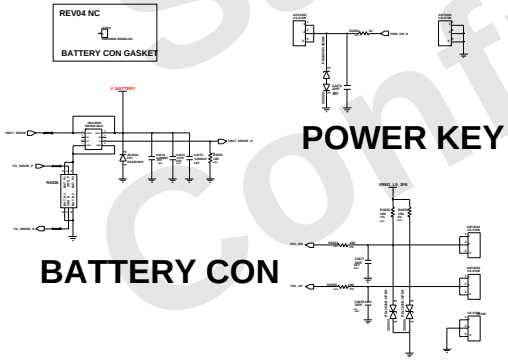

BATTERY CON

POWER KEY

VOLUME KEY

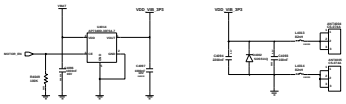

MOTOR

SIM & SD CARD

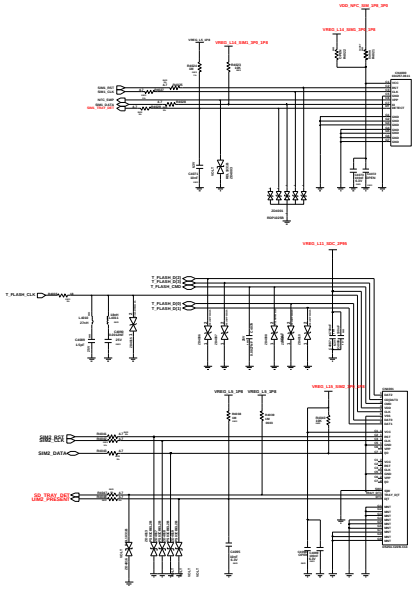

Samsung Confidential

SAMSUNG CONFIDENTIAL
THIS DOCUMENT CONTAINS CONFIDENTIAL
AND PROPRIETARY INFORMATION OF
SAMSUNG ELECTRONICS CO'S PROPERTY.
DO NOT DISCLOSE TO OR DUPLICATE FOR OTHERS
EXCEPT AS AUTHORIZED BY SAMSUNG.

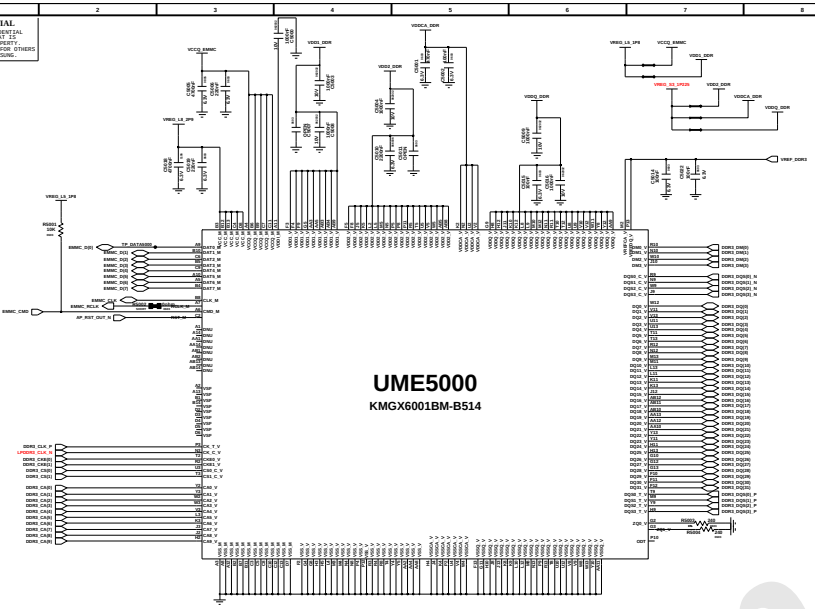

REGION	ROM	RAM
EUR	32	3
CIS	32	3
LA	32	3
LA(Brazil)	64	4
SEA	32	4
SWA	64	4
MEA	64	4
AFR	32	3
KOR	32	3
CHN	64	4

KMGX6001BM-B514 , 32GB +24Gb (1108-000638)

AUDIO PART

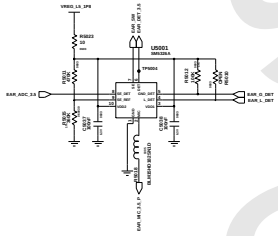

EAR_DETECT

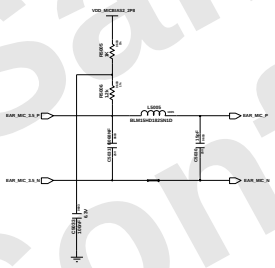

Ear MIC

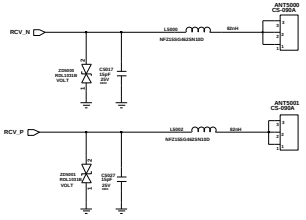

RCV CONTACT

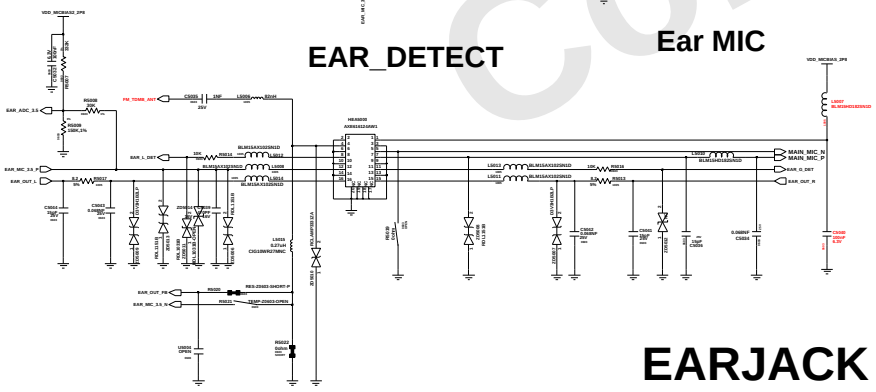

EARJACK Ass'Y

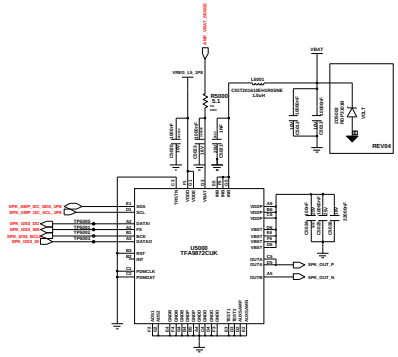

SPK AMP

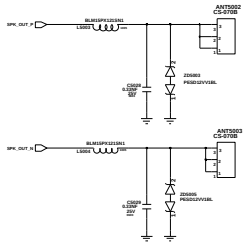

SPK CONTACT

Engineer	AUDIO / MOTOR / KEY
Design by	
R&D CHK:	TITLE: J7 POP
DOC CTRL CHK:	
MFG ENGR CHK:	
QA CHK:	Drawing Number / S/N

Samsung Confidential

SAMSUNG CONFIDENTIAL
THIS DOCUMENT CONTAINS CONFIDENTIAL AND PROPRIETARY INFORMATION OF SAMSUNG ELECTRONICS CO'S PROPERTY. DO NOT DISCLOSE TO OR DUPLICATE FOR OTHERS EXCEPT AS AUTHORIZED BY SAMSUNG.

CAMERA PART

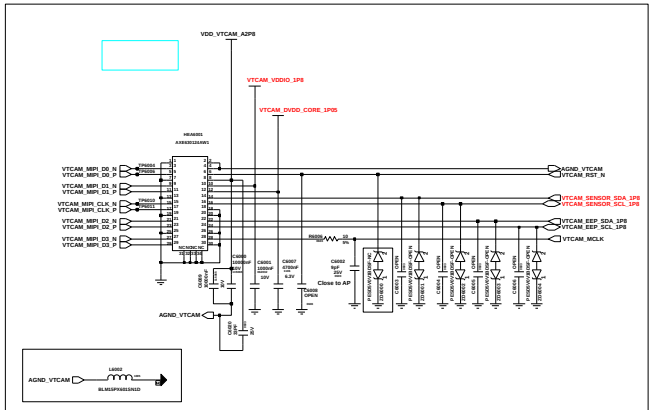

VT CAMERA 24MP Tetra 30 Pin conn 2017.10.23

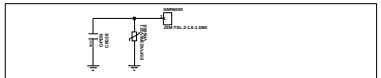

Camera SMR 2017.10.18

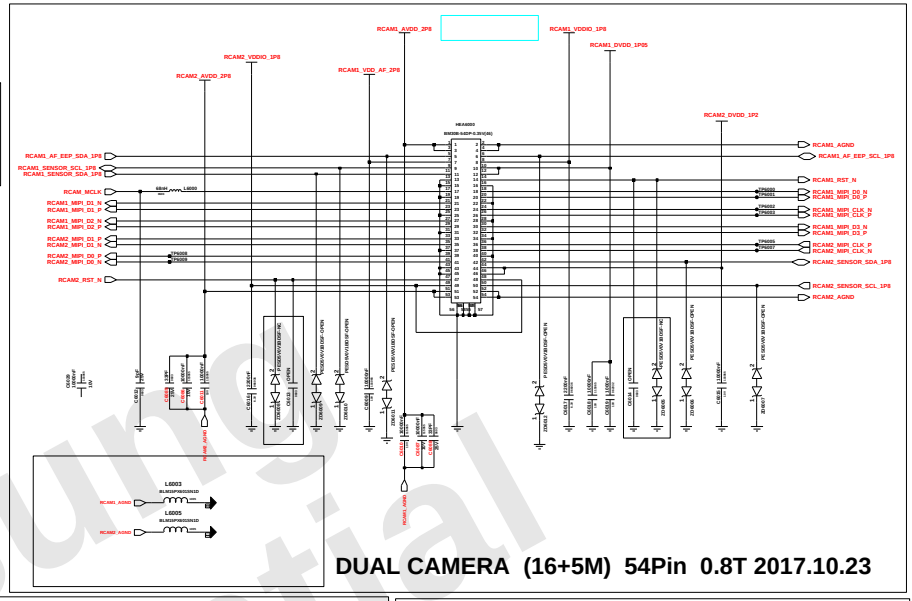

DUAL CAMERA (16+5M) 54Pin 0.8T 2017.10.23

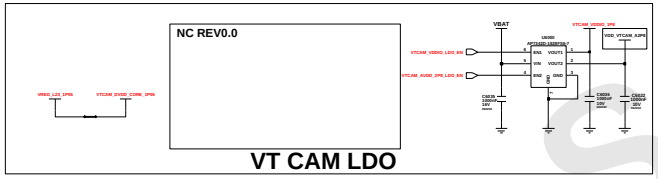

VT CAM LDO

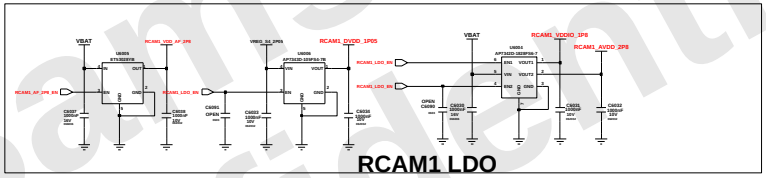

RCAM1 LDO

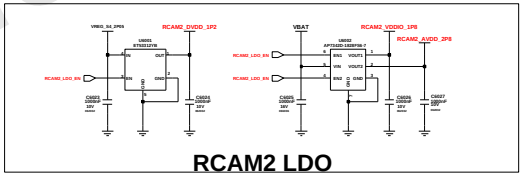

RCAM2 LDO

DISPLAY

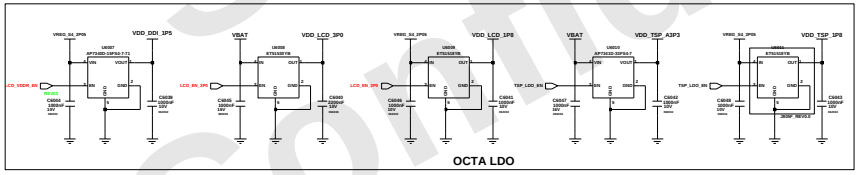

OCTA LDO

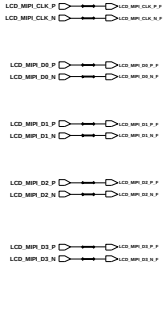

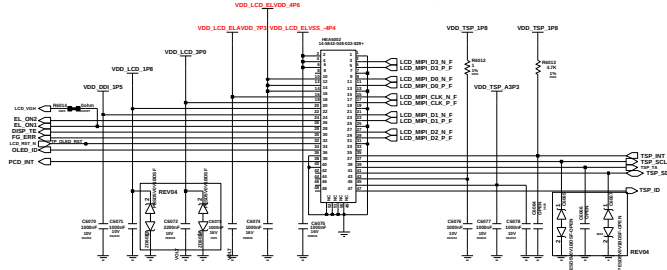

DISPLAY

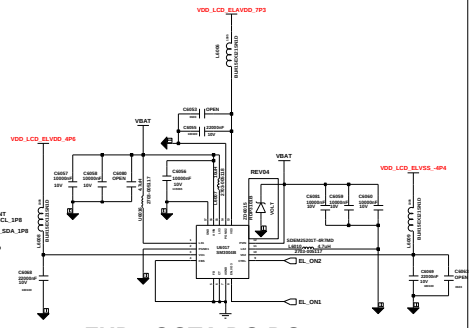

FHD+ OCTA DC-DC

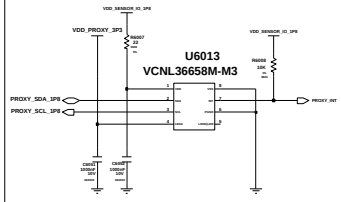

Proxi Sensor

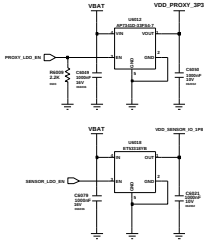

SENSOR LDO

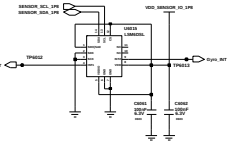

6 Axis Sensor(ACC + GYRO)

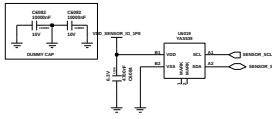

Magnetic Sensor

SENSOR

Engineer:	CAMERA, DISPLAY, MHL
Section Sgn:	
R&D CHK:	TITLE:
DOC CTRL CHK:	
MFG ENGR CHK:	
QA CHK:	REV: / Drawing Number: / Page:

Changed By: / Date Changed: / Total Change:

Samsung Confidential

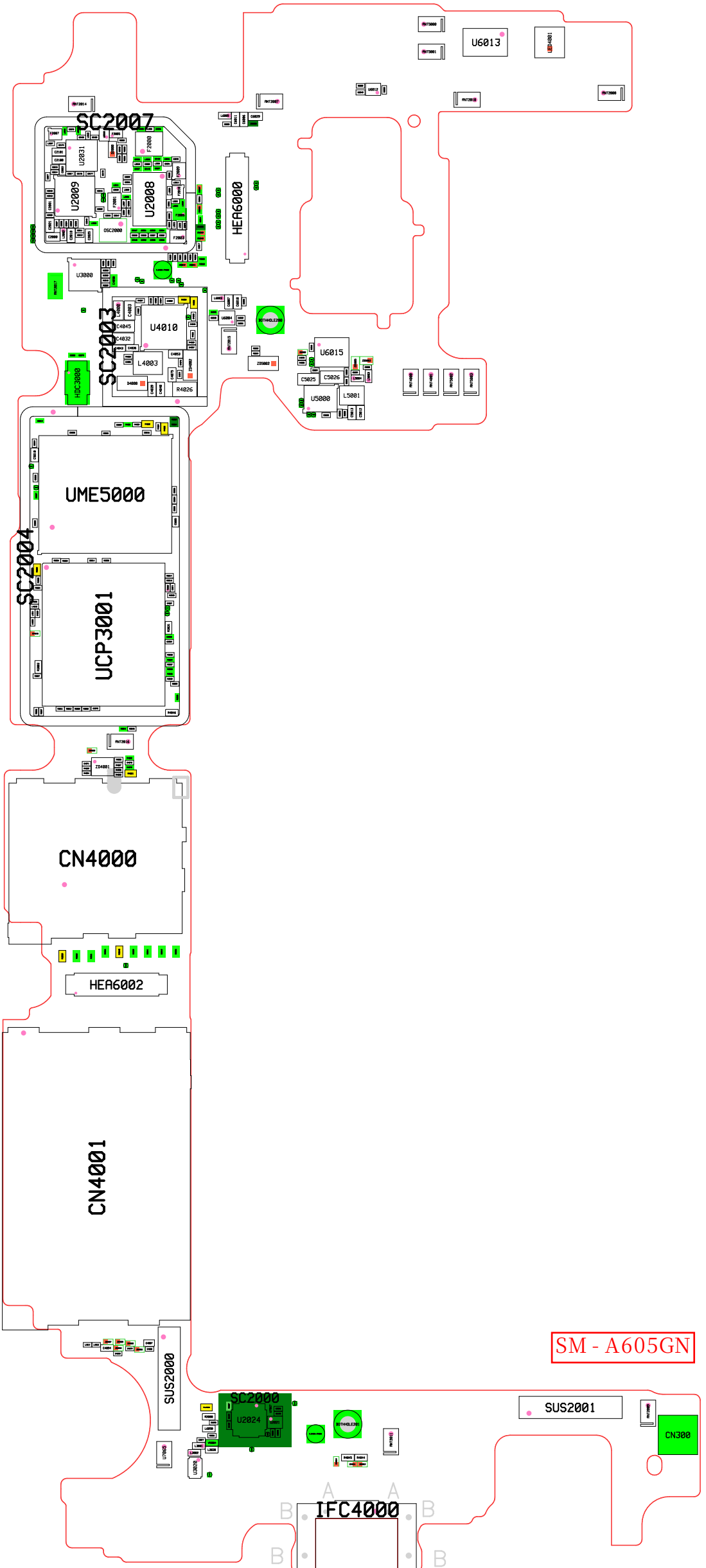
SC2007
U2031
F2000
U2009
U2008
OSC2000
HEA6000
U6013
U3000
SC2003
U4010
L4003
R4026
HDC3000
U6015
C5025
C5026
U5000
L5001
SC2004
UME5000
UCP3001
CN4000
HEA6002
CN4001
SUS2000
SC2000
U2024
SUS2001
CN300
IFC4000
SM - A605GN

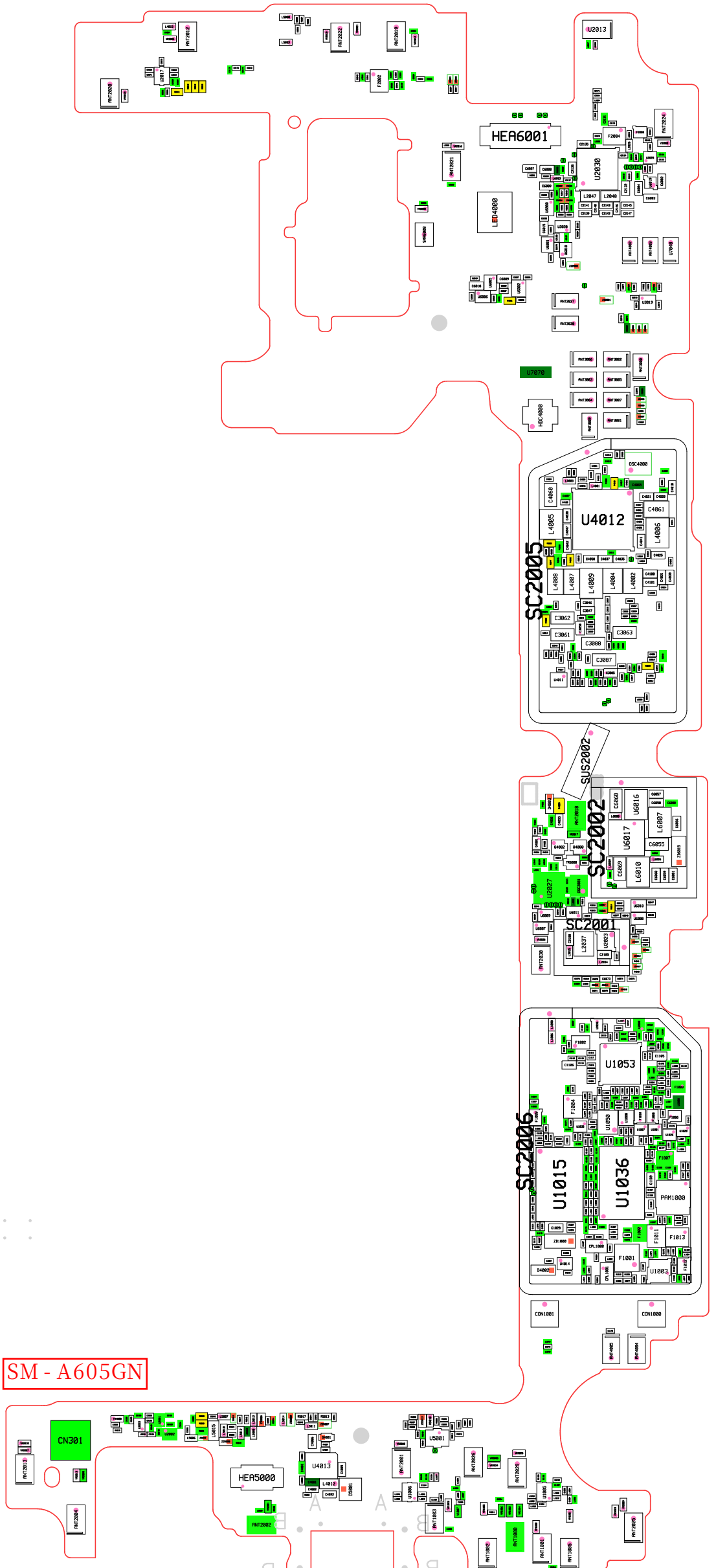
HEA6001
U2030
LED4000
U2013
U7078
HDC4000
OSC4000
U4012
SC2005
SUS2002
SC2002
SC2001
U1053
U1015
U1036
SC2006
CON1001
CON1000
SM - A605GN
CN301
HEA5000
U4013
U5001

SM - A605G Common

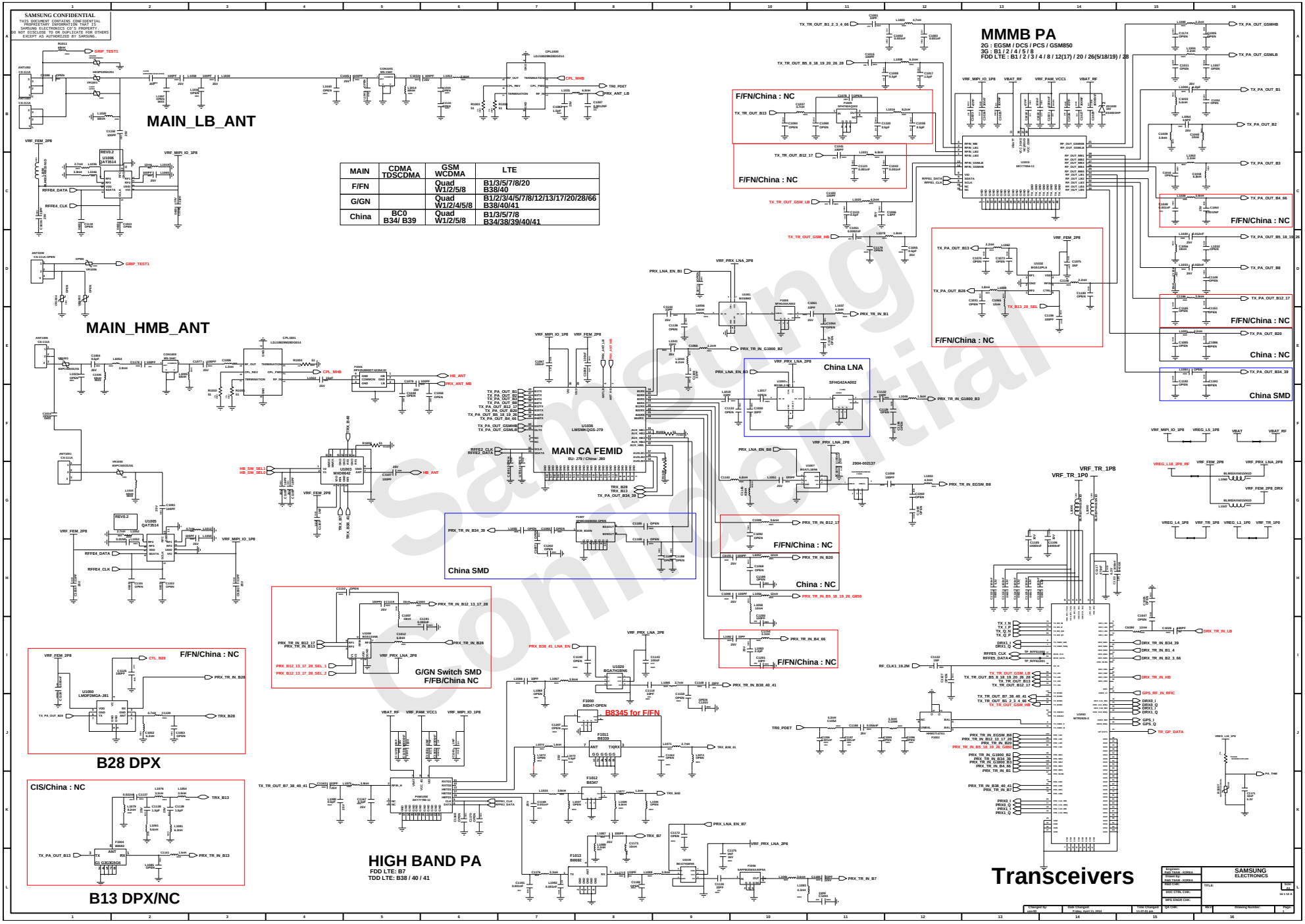

MAIN	CDMA TDSCDMA	GSM WCDMA	LTE
F/FN		Quad W1/2/5/8	B1/3/5/7/8/20 B38/40
G/GN		Quad W1/2/4/5/8	B1/2/3/4/5/7/8/12/13/17/20/28/66 B38/40/41
China	BC0 B34/ B39	Quad W1/2/5/8	B1/3/5/7/8 B34/38/39/40/41

Samsung Confidential

SAMSUNG CONFIDENTIAL
THIS DOCUMENT CONTAINS SAMSUNG ELECTRONICS' PROPRIETARY INFORMATION THAT IS SAMSUNG ELECTRONICS CO'S PROPERTY. DISCLOSURE TO THIRD PARTIES OR USE FOR ANY PURPOSE EXCEPT AS AUTHORIZED BY SAMSUNG.

Diversity	CDMA TDSCDMA	GSM WCDMA	LTE
F/FN		Quad W1/2/5/8	B1/3/5/7/8/20 B38/40
G/GN		Quad W1/2/4/5/8	B1/2/3/4/5/7/8/12/13/17/20/28/66 B38/40/41
China	BC0 B34/ B39	G850/900/1800 W1/5/8	B1/3/5/7/8 B34/38/39/40/41

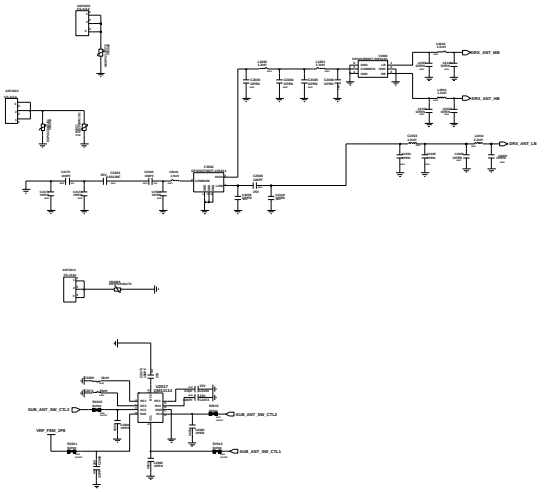

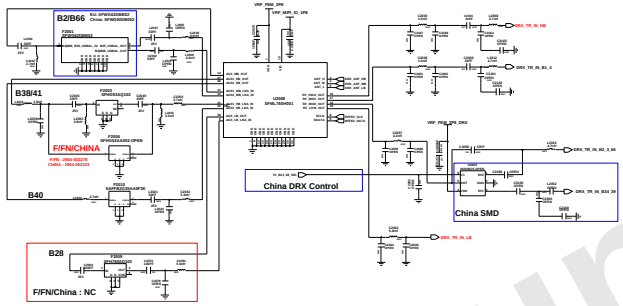

Diversity LNA FEM

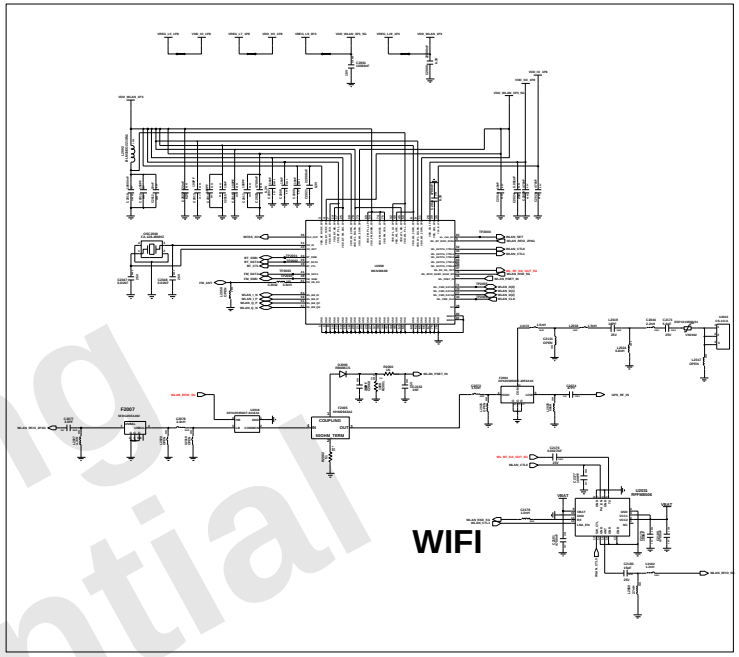

WIFI

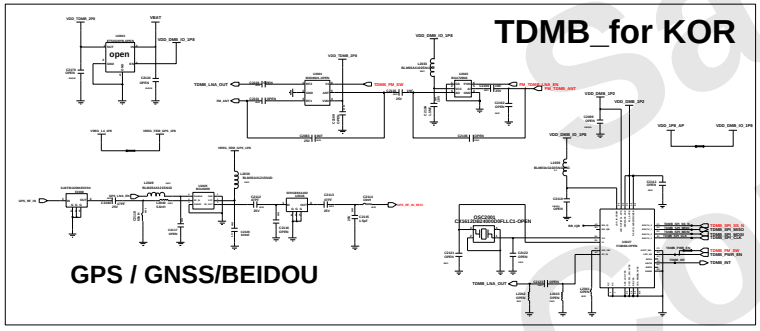

TDMB_for KOR

GPS / GNSS/BEIDOU

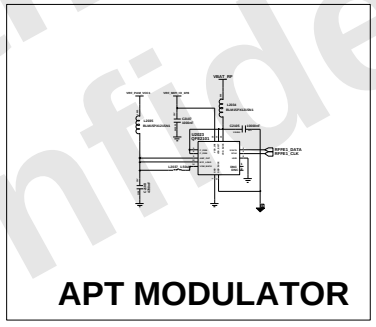

APT MODULATOR

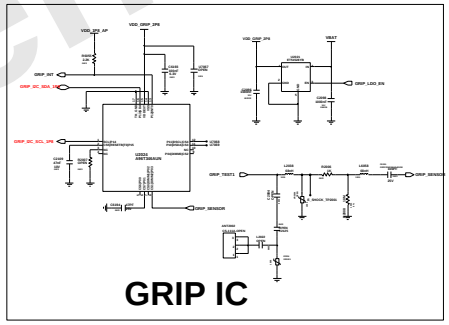

GRIP IC

NFC

nonNFC : NC

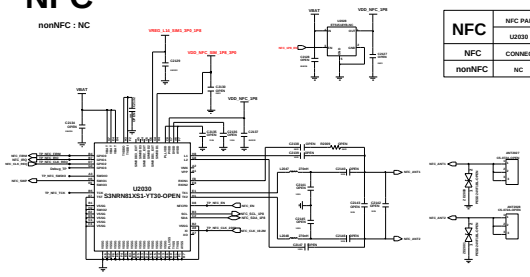

NFC	NFC PART	Power supply of SIM1		NFC GPIO140	
	U2030	R4021	R4022	R3029	R3058
NFC	CONNECT	short	open	100ohm	open
nonNFC	NC	open	short	open	100ohm

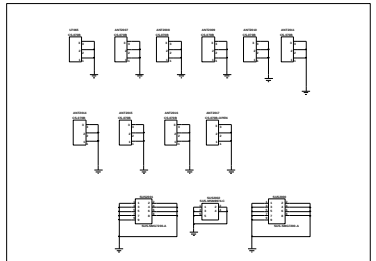

TOP Contact

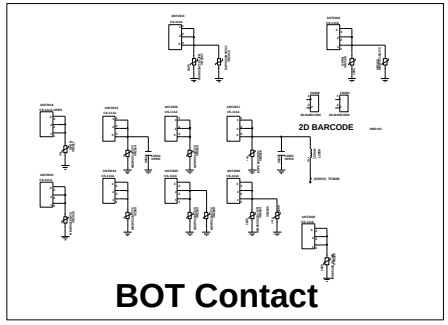

BOT Contact

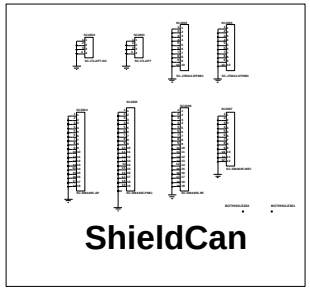

ShieldCan

Samsung Confidential

SAMSUNG CONFIDENTIAL
THIS DOCUMENT CONTAINS SAMSUNG ELECTRONICS CORPORATION PROPRIETARY INFORMATION THAT IS SAMSUNG ELECTRONICS CO'S PROPERTY. DISCLOSURE TO THIRD PARTIES OR USE WITHOUT WRITTEN SUCH AUTHORIZED BY SAMSUNG.

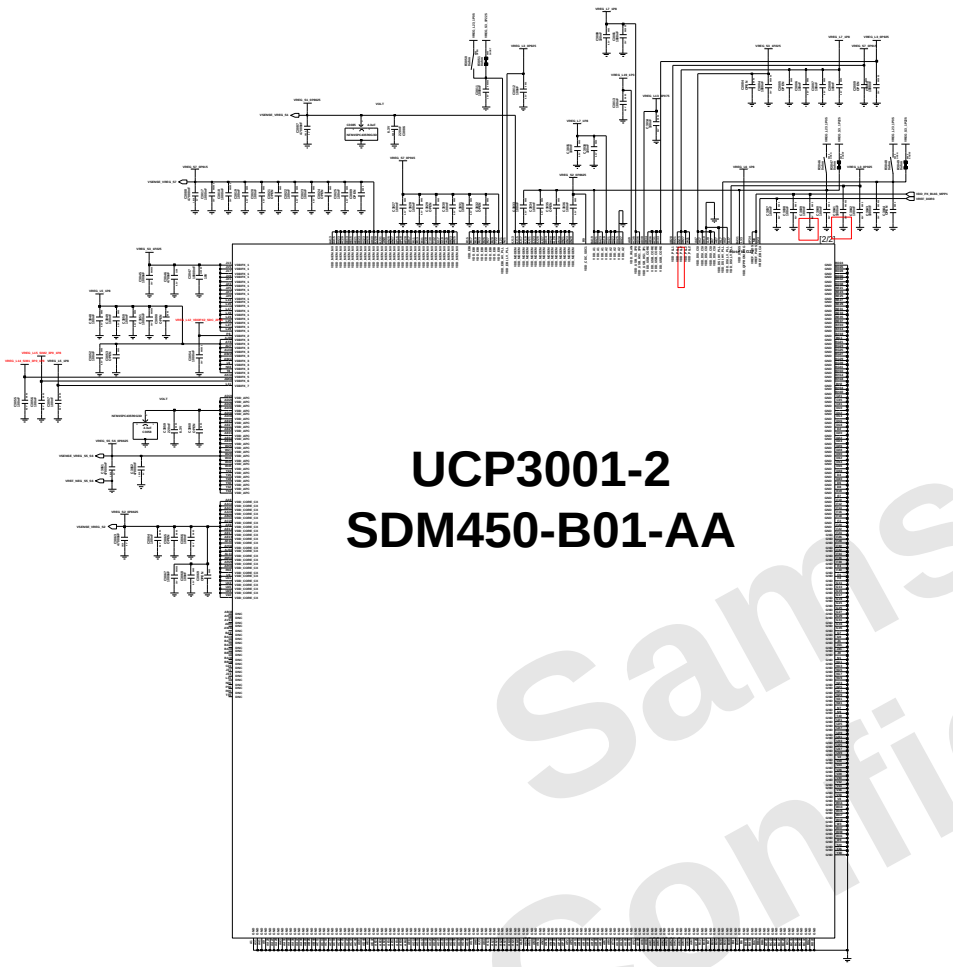

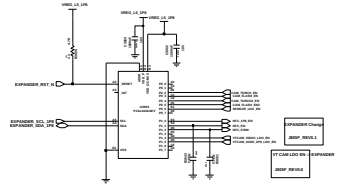

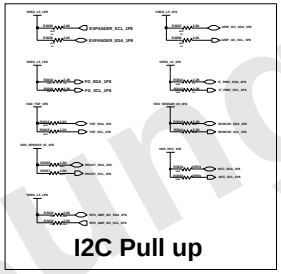

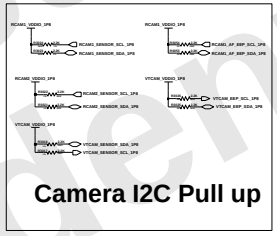

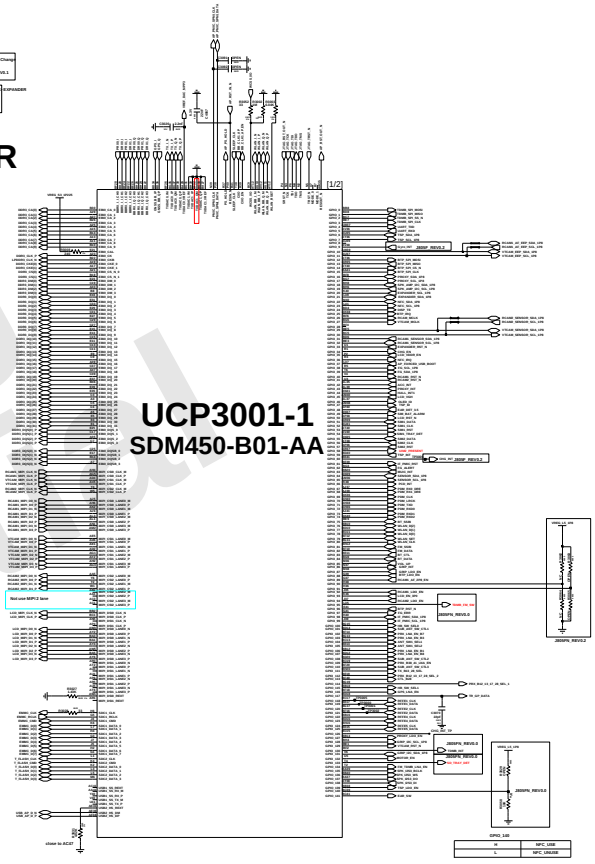

Samsung Confidential

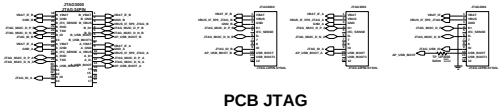

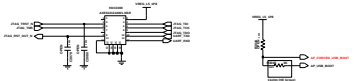

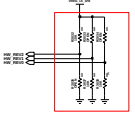

PCB H/W Revision

	MW_REV2	HW_REV1	HW_REV2
Bringup REV0.2	H	L	H
SDM450 REV0.3	L	L	H
J805FN_REV0.0	L	H	L
J805FN_REV0.1	L	H	H
J805FN_REV0.2	H	L	L

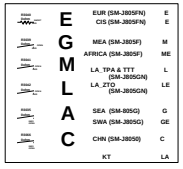

E	EUR (SM-J805FN)	E
	CIS (SM-J805FN)	E
G	MEA (SM-J805F)	M
	AFRICA (SM-J805F)	ME
M	LA_TPA & TTT (SM-J805GN)	L
	LA_ZTO (SM-J805GN)	LE
L	SEA (SM-805G)	G
	SWA (SM-J805G)	GE
A	CHN (SM-J805G)	C
	KT	LA

REGION

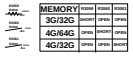

MEMORY	RS000	RS001	RS002
3G/32G	SHORT	OPEN	OPEN
4G/64G	OPEN	SHORT	OPEN
4G/32G	OPEN	OPEN	SHORT

MEMORY

BTP

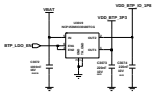

BTP LDO

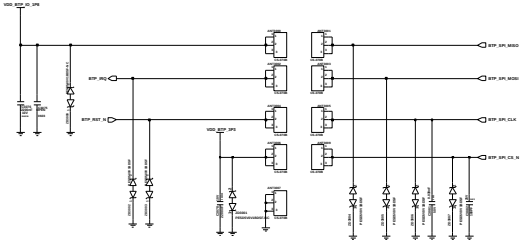

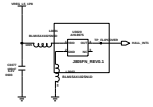

FLIP Cover Detect

Engineer:	SAMSUNG ELECTRONICS		
Date:			
Project:	J7 POP		
Schematic Name:			
Revision:			
Copyright for Samsung Electronics Co., Ltd.	Date Managed: 2018-03-21	Date Managed: 2018-03-21	Analog Revision:

SAMSUNG CONFIDENTIAL
THIS DOCUMENT CONTAINS SAMSUNG ELECTRONICS PROPRIETARY INFORMATION THAT IS SAMSUNG ELECTRONICS CO'S PROPERTY. DISCLOSURE TO THIRD PARTIES OR ANY USE WITHOUT SUCH RIGHTS IS STRICTLY NOT AUTHORIZED BY SAMSUNG.

POWER

IF PMIC(MUIC+CHG+FG+BUCK+LDO)

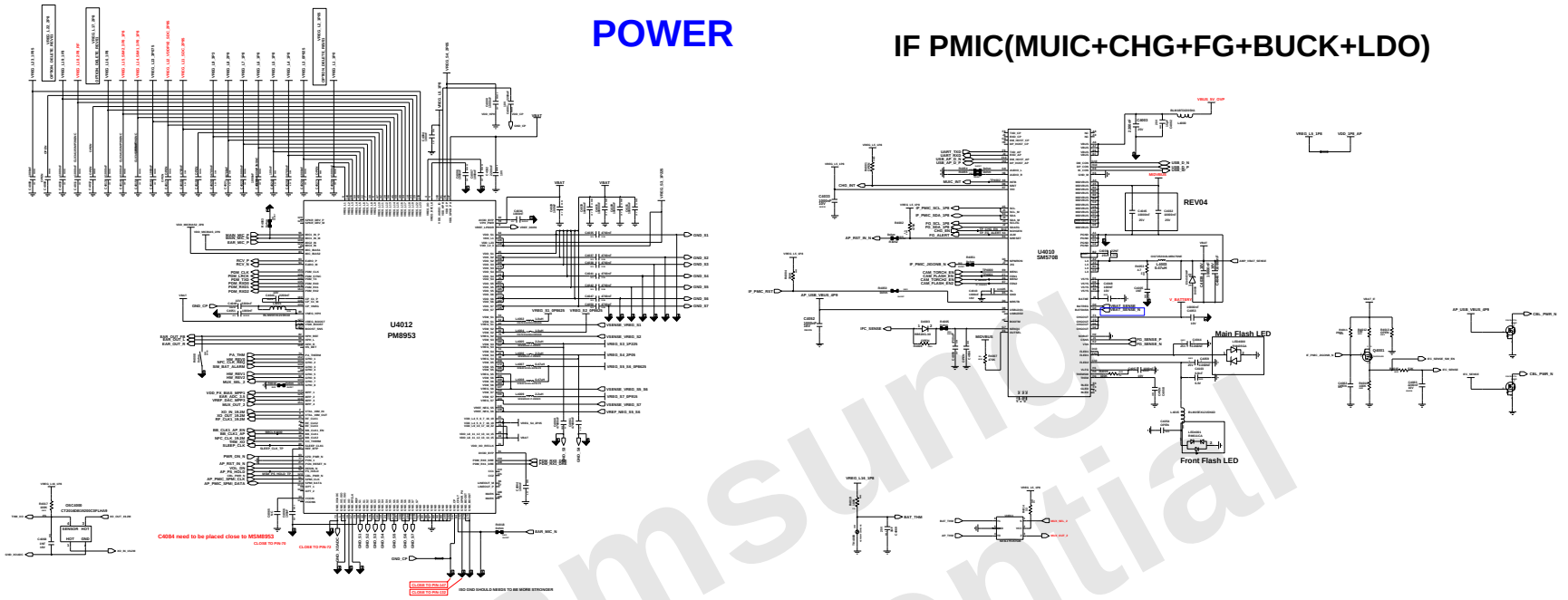

MAIN PMIC @ PM8953

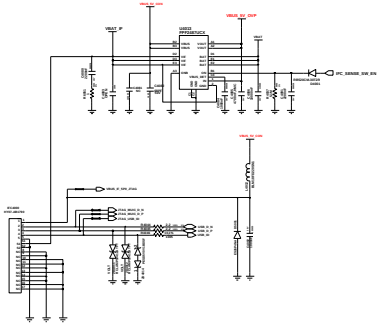

IF CON

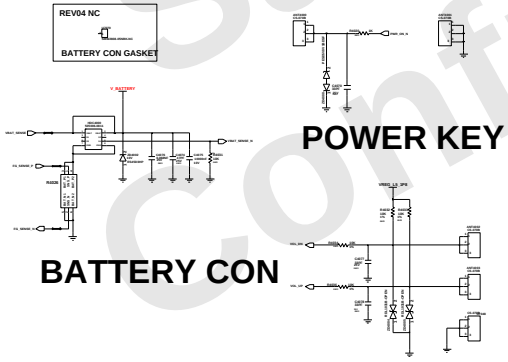

BATTERY CON

POWER KEY

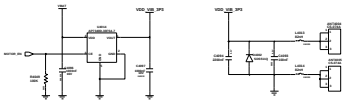

MOTOR

VOLUME KEY

SIM & SD CARD

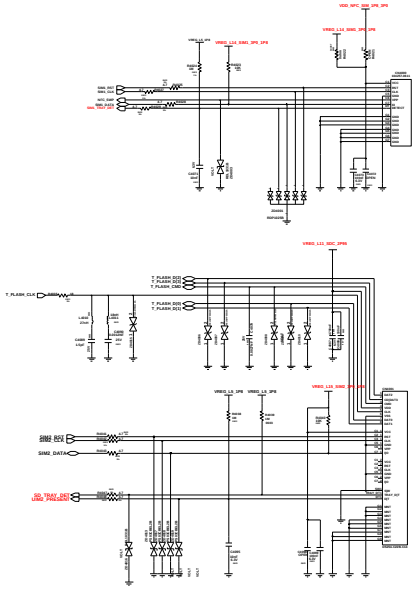

Samsung Confidential

SAMSUNG CONFIDENTIAL
THIS DOCUMENT CONTAINS CONFIDENTIAL
AND PROPRIETARY INFORMATION OF
SAMSUNG ELECTRONICS CO'S PROPERTY.
DO NOT DISCLOSE TO OR DUPLICATE FOR OTHERS
EXCEPT AS AUTHORIZED BY SAMSUNG.

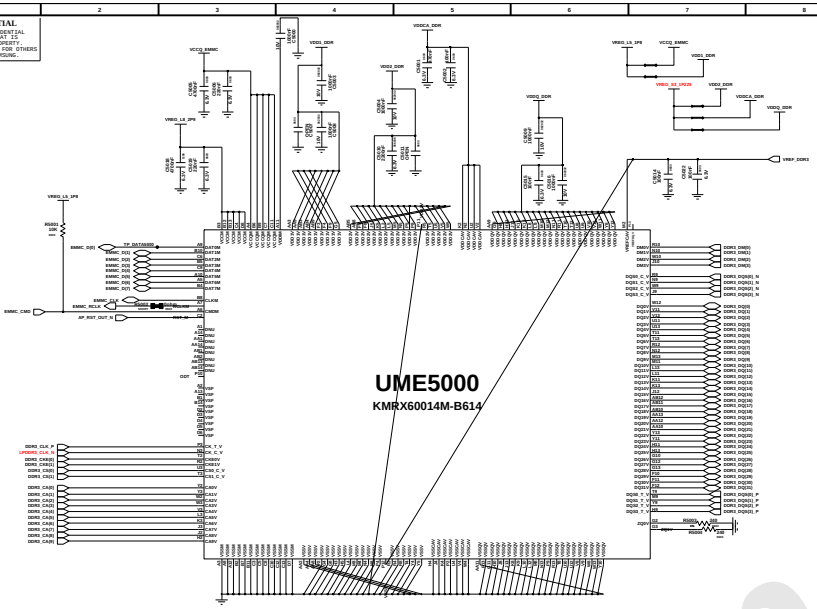

REGION	ROM	RAM
EUR	32	3
CIS	32	3
LA	32	3
LA(Brazil)	64	4
SEA	32	4
SWA	64	4
MEA	64	4
AFR	32	3
KOR	32	3
CHN	64	4

KMGX6001BM-B514 , 32GB +24Gb (1108-000638)

Samsung Confidential

AUDIO PART

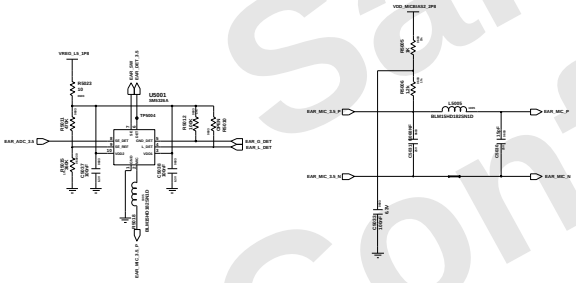

EAR_DETECT

Ear MIC

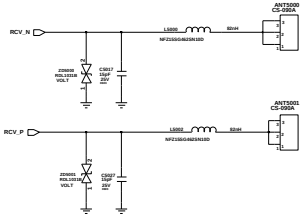

RCV CONTACT

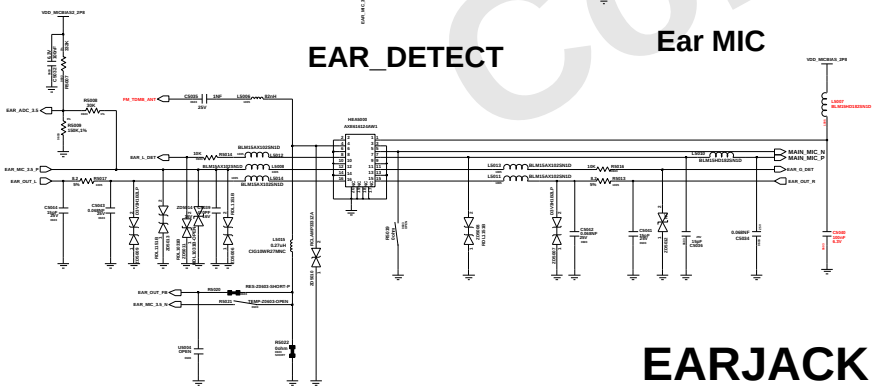

EARJACK Ass'Y

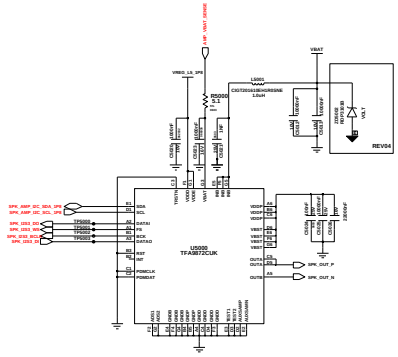

SPK AMP

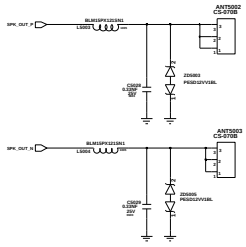

SPK CONTACT

Engineer	AUDIO / MOTOR / KEY
Design by	
R&D CHK:	TITLE: J7 POP
DOC CTRL CHK:	
MFG ENGR CHK:	
QA CHK:	Drawing Number / S/N

Changed By / Date Changed / Total Changed

SAMSUNG CONFIDENTIAL
THIS DOCUMENT CONTAINS CONFIDENTIAL AND PROPRIETARY INFORMATION OF SAMSUNG ELECTRONICS CO'S PROPERTY. DO NOT DISCLOSE TO OR DUPLICATE FOR OTHERS EXCEPT AS AUTHORIZED BY SAMSUNG.

CAMERA PART

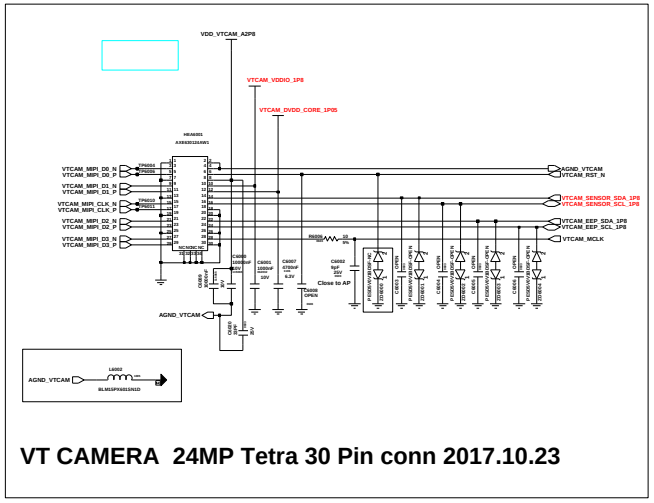

VT CAMERA 24MP Tetra 30 Pin conn 2017.10.23

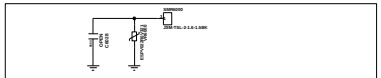

Camera SMR 2017.10.18

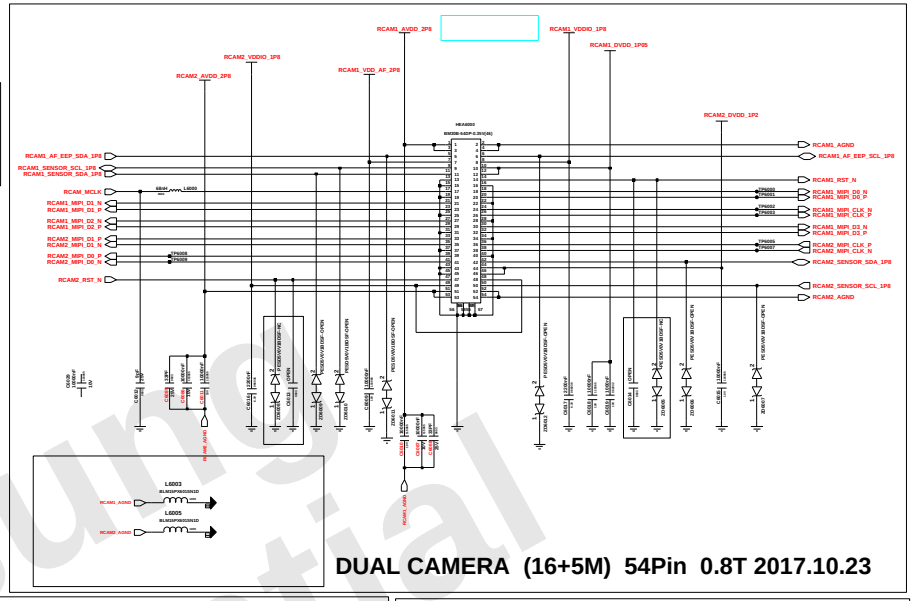

DUAL CAMERA (16+5M) 54Pin 0.8T 2017.10.23

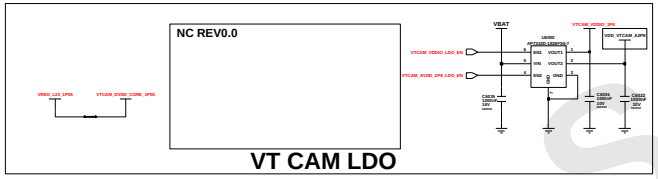

VT CAM LDO

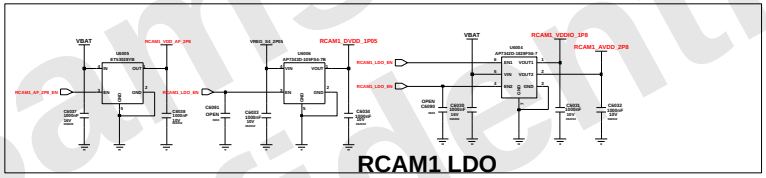

RCAM1 LDO

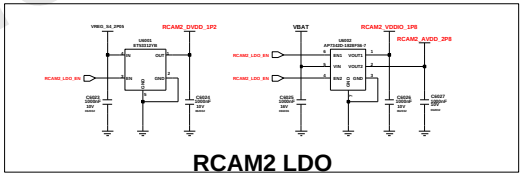

RCAM2 LDO

DISPLAY

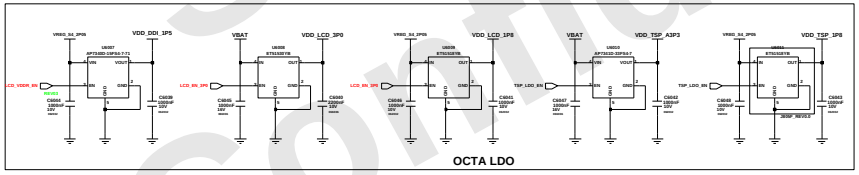

OCTA LDO

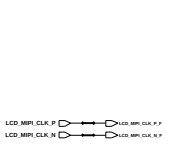

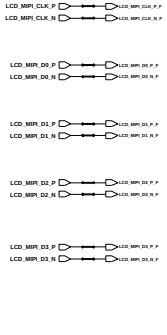

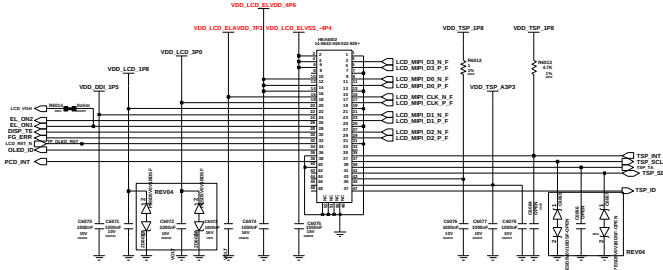

DISPLAY

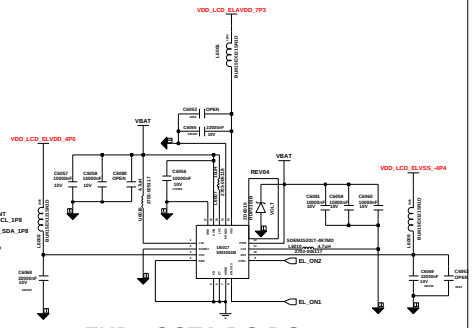

FHD+ OCTA DC-DC

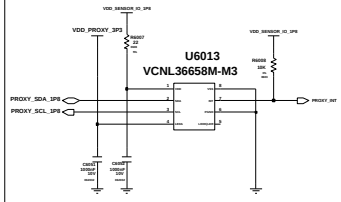

Proxi Sensor

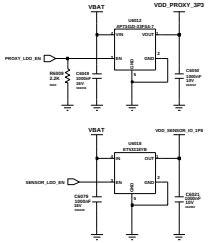

SENSOR LDO

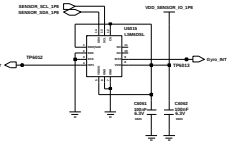

6 Axis Sensor(ACC + GYRO)

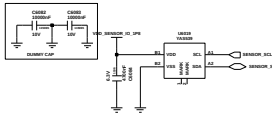

Magnetic Sensor

SENSOR

Engineer:	CAMERA, DISPLAY, MHL
Section Sgn:	
R&D CHK:	TITLE:
DOC CTRL CHK:	
MFG ENGR CHK:	
QA CHK:	REV: / Drawing Number: / Page:

Changed By: / Date Changed: / Time Changed:

Samsung Confidential

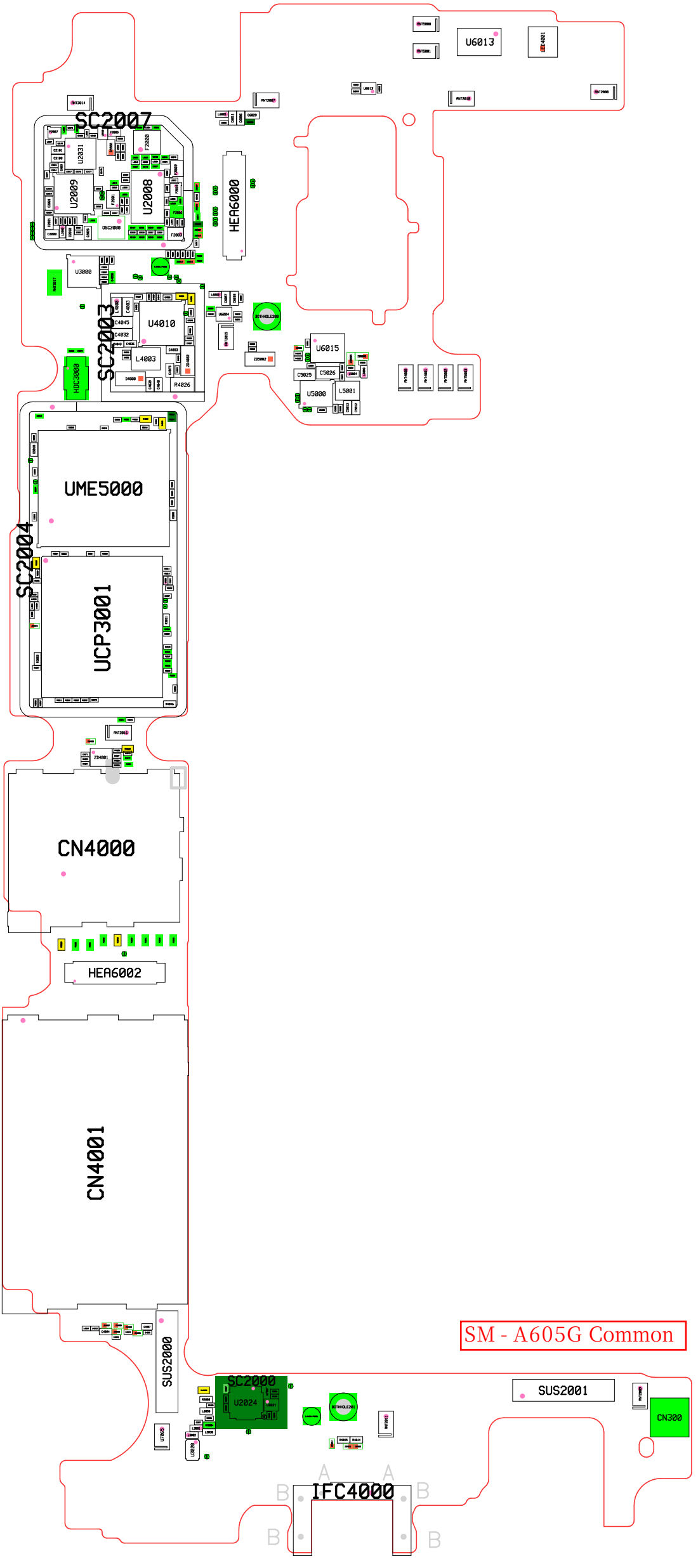
SC2007
U2031
F2000
U2009
U2008
OSC2000
HEA6000
U3000
SC2003
U4010
C4045
C4032
L4003
D4000
R4026
HDC3000
U6013
U6015
C5025
C5026
U5000
L5001
UME5000
SC2004
UCP3001
CN4000
HEA6002
CN4001
SUS2000
SC2000
U2024
SUS2001
CN300
IFC4000
A
B
SM - A605G Common

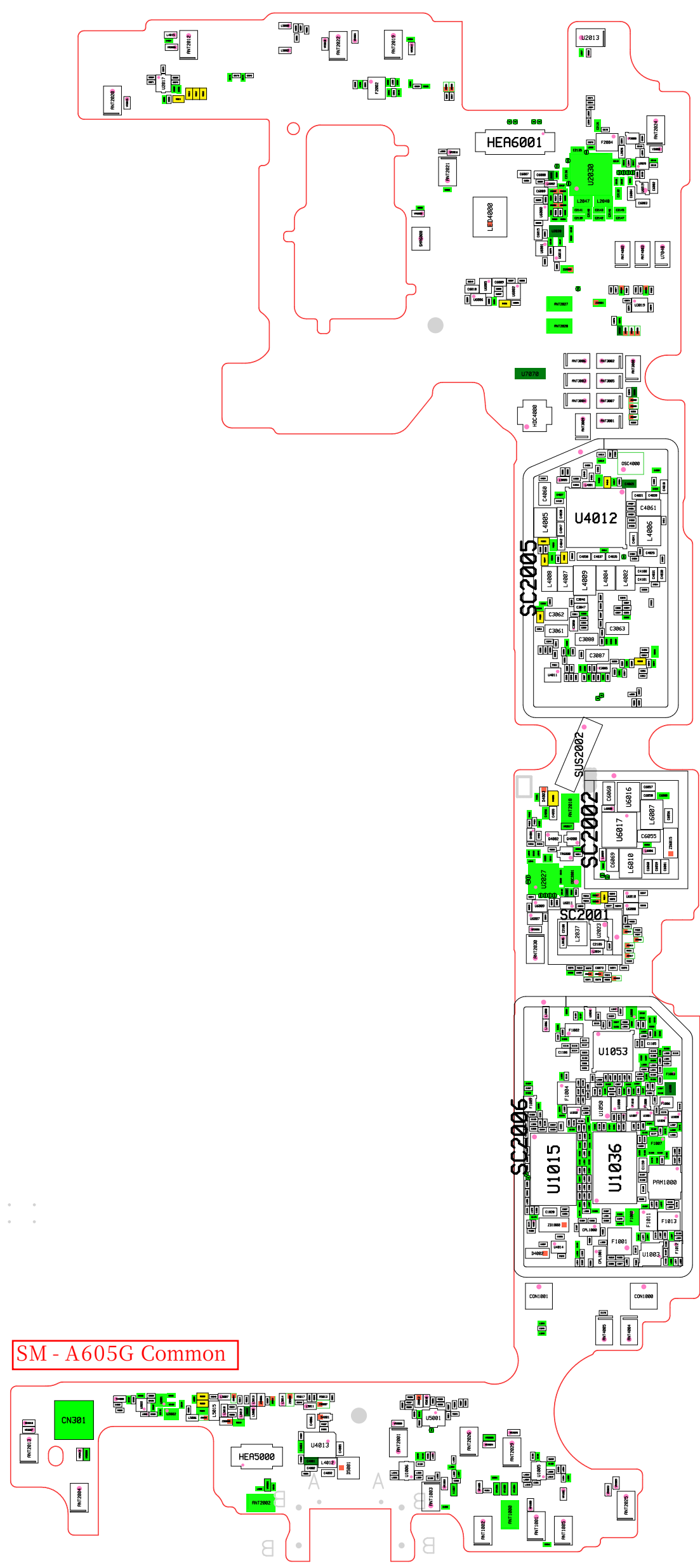
SM - A605G Common
HEA6001
LED4000
U2030
U2013
U7070
HDC4000
OSC4000
U4012
SC2005
SUS2002
SC2002
U6017
U6016
SC2001
U1053
SC2006
U1015
U1036
PAM1000
CON1001
CON1000
CN301
HEA5000
U4013
U5001